Methodist College
of Engineering & Technology

(Affiliated to Osmania University, Hyderabad)

King Koti Road, Abids, Hyderabad

Department of Mechanical Engineering

LABORATORY MANUAL

Machine Drawing & Modeling Lab

Student Name :

Hall Ticket No :

Class / Sem :

CONTENTS

SYLLABUS **3**

List of Experiments: 3

I. Machine Drawing (AutoCAD): 3

II. Assembly drawing (SOLIDWORKS/ CATIA/ PRO-E): 3

Suggested Reading: 3

1. Format of drawing sheet & title block **4**

Designation of sheet sizes 4

Title Block 4

AutoCAD commands: 5

Task - Create an AutoCAD Template: 5

Trick: 6

2. Conventions of drawing lines and dimensions **7**

AutoCAD commands: 7

Conventions: 10

Tip: 10

Creating a Template with required settings **11**

3. Convention for sectional views. **12**

Orthographic Sectional Views 13

4. Simple Machine Elements. **16**

Keys & Cotters 16

5. Riveted And Screwed Fastenings. **18**

Experiment 18

Question No 1 19

Question No 2 19

Question No 3 20

Question No 4 20

Question No 5 21

Question No 6 21

Nut & Bolt Assemblies, Stud & Tap Bolts, Set Screws 22

6. Joints And Coupling. **23**

Double Cottered Joint / Cottered Joint with Sleeve 23

Cotter Joint with Socket Spigot Joint 23

Knuckle Joint 23

II. Assembly drawing (SOLIDWORKS/ CATIA/ PRO-E) 25

Assembly No 1: Stuffing Boxes 25

Assembly No 2: Cross Heads 27

Assembly No 3: Eccentrics 29

Assembly No 4: Lathe Tool Post 31

Assembly No 5: Plummer Block 33

Assembly No 6: Screw Jack 35

Assembly No 7: Connecting Rod 37

Assembly No 8: Rotating Center 39

SYLLABUS

Course Code	Course Title						Core/Elective
PC252ME	Machine Drawing and Modelling Lab						Core
Prerequisite	Contact Hours per Week				CIE	SEE	Credits
	L	T	D	P			
-	-	-	-	2	25	50	3

Course Objectives

- To understand format of drawing sheet, angle of projections, isometric projections and practice on simple machine elements
- To practice free hand sketching of machine elements
- To understand Modelling of assembly drawings of typical machine parts.

Course Outcomes

At the end of the course, the student

- Will be able to draw isometric and orthogonal projections and sectional views of various mechanical components.
- Will be able to draw free hand sketches of various mechanical components
- Will be able to understand the shape and structure of different types of joints, screws, keys and Couplings
- Will be sufficiently knowledgeable to use both the software and drafter to produce assembly views of various mechanical components from part drawings.

List of Experiments:

I. Machine Drawing (AutoCAD):

1. Format of drawing sheet & title block,
2. Conventions of drawing lines and dimensions,
3. Convention for sectional views.
4. Simple machine elements.
5. Riveted and screwed fastenings.
6. Joints and coupling.

II. Assembly drawing (SOLIDWORKS/ CATIA/ PRO-E):

1. Connecting rod.
2. Eccentric.
3. Cross head.
4. Stuffing box.
5. Lathe Tool Post.
6. Revolving centre.
7. Pedestal bearing (Plummer block).
8. Screw Jack

Note: *The test is for* the *ability of the student to read and interpret drawings. The drawing should include part list in standard format.*

Suggested Reading:

1. N.D. Bhatt, Machine Drawing, Charotar Publishing house, Anand, New Delhi, 28th edition, 1994.
2. K.L. Narayana, P. Kannaiah, K. Venkat Reddy, Machine Drawing, New Age International (P) Ltd., 2nd edition 1999.
3. N. Siddeshwar, Machine Drawing, Tata McGraw Hill Publishing Co. Ltd., 5th edition, 1994
4. K. C. John, Textbook of Machine Drawing, PHI Learning,

1. Format of drawing sheet & title block

Designation of sheet sizes

The original drawing should be made on the smallest sheet, permitting the necessary clarity and resolution. The preferred sizes according to ISO-A series (First choice) of the drawing sheets are given in Table 2.1. When sheets of greater length are needed, special elongated sizes (Second choice) are used (Table 2.2). These sizes are obtained by extending the shorter sides of the format of the ISO-A series to lengths that are multiples of the shorter sides of the chosen basic format.

Table 2.1 Preferred drawing sheet sizes (First choice) ISO-A Series

Designation	*Dimensions* (mm)
A0	841 × 1189
A1	594 × 841
A2	420 × 594
A3	297 × 420
A4	210 × 297

Table 2.2 Special elongated sizes (Second choice)

Designation	*Dimensions* (mm)
A3 × 3	420 × 891
A3 × 4	420 × 1188
A4 × 3	297 × 630
A4 × 4	297 × 840
A4 × 5	297 × 1050

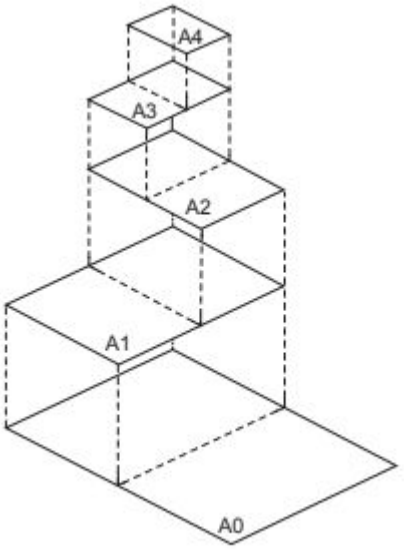

Fig. 2.1 Drawing sheet formats

Title Block

The title block should lie within the drawing space such that, the location of it, containing the identification of the drawing, is at the bottom right hand corner. This must be followed, both for sheets positioned horizontally or vertically (Fig. 2.2).

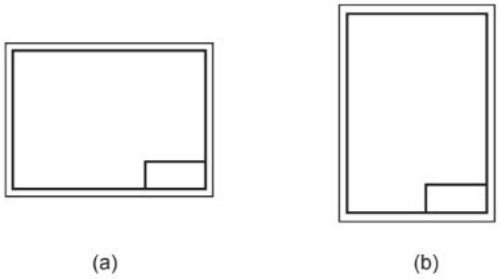

Fig. 2.2 Location of title block

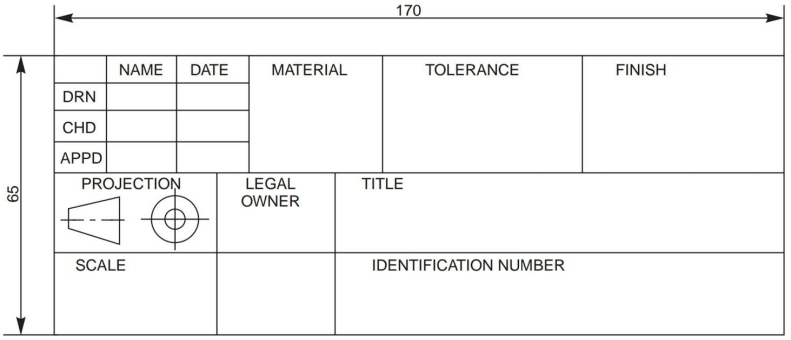

Fig. 2.3 Details in title block

The direction of viewing of the title block should correspond in general with that of the drawing. The title block can have a maximum length of 170 mm. Figure 2.3 shows a typical title block, providing the following information:

i. Title of the drawing
ii. Sheet number
iii. Scale
iv. Symbol, denoting the method of projection
v. Name of the firm
vi. Initials of staff drawn, checked and approved.

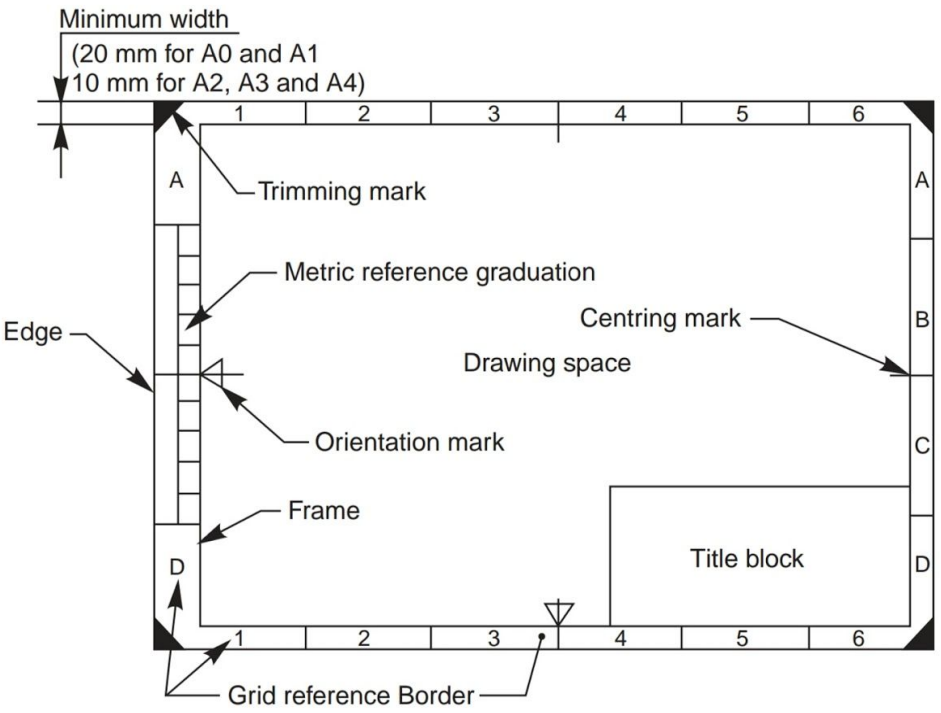

AutoCAD commands:

Layouts: these can be accessed from the tab at the bottom of AutoCAD window (just above command line).

- They show the drawings exactly as they'd appear in the print out (unless the printer is faulty) when the LineWeight visibility is ON.
- Absolute scale can be adjusted by using Zoom command & entering scale factor as 1XP for 1:1 & so on…
- Title bar drawn in layout space in paper mode will keep its size fixed relative to the size of sheet A4, A2 etc…
- To change paper size & other settings right click on layout name at the bottom & select "Page Setup Manager" option.

Task - Create an AutoCAD Template:

Templates are files which save all the settings (of dimensioning, text, linetype, color, lineweight, Blocks, layers, layouts etc...) that can speed up the drafting process of an engineer by avoiding unnecessary waste of time.

Create a template for yourself with following settings.

1. Right click on layout name & Change the Printer/plotter & paper size as shown in the image below.

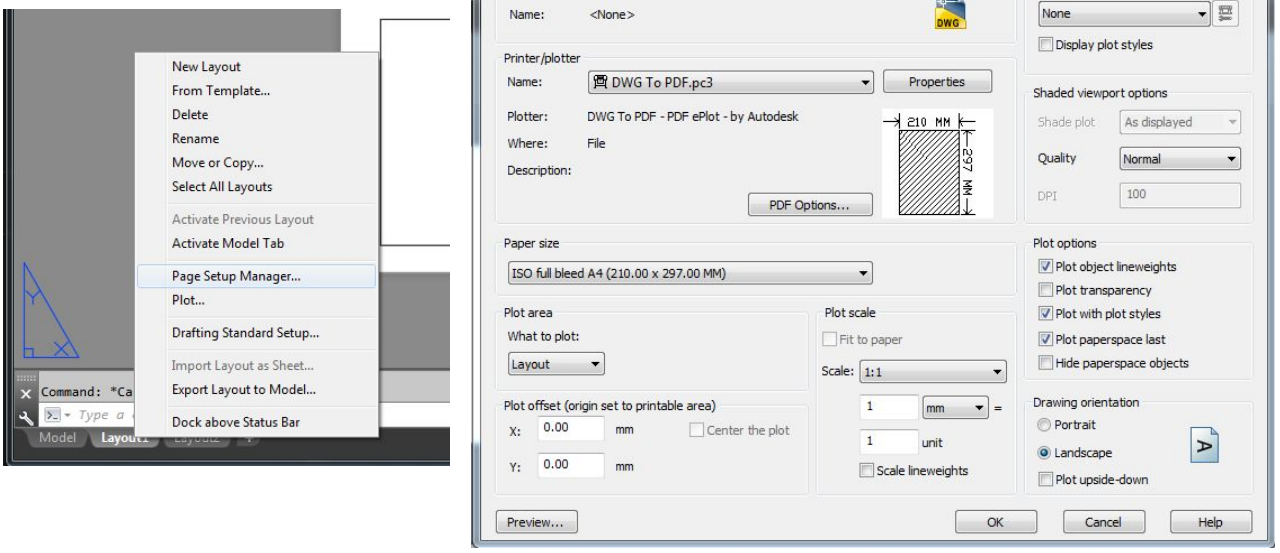

2. Change other settings like layers, colors etc… suitably as required.
3. Save the file as a template in D drive with extension of .dwt (refer to the following images).
4. The next time you want to use the template, just open it from its location using windows explorer by double clicking the template file from its location.
    a. When you save your work it will ask you to save in a separate file with .dwg extension.

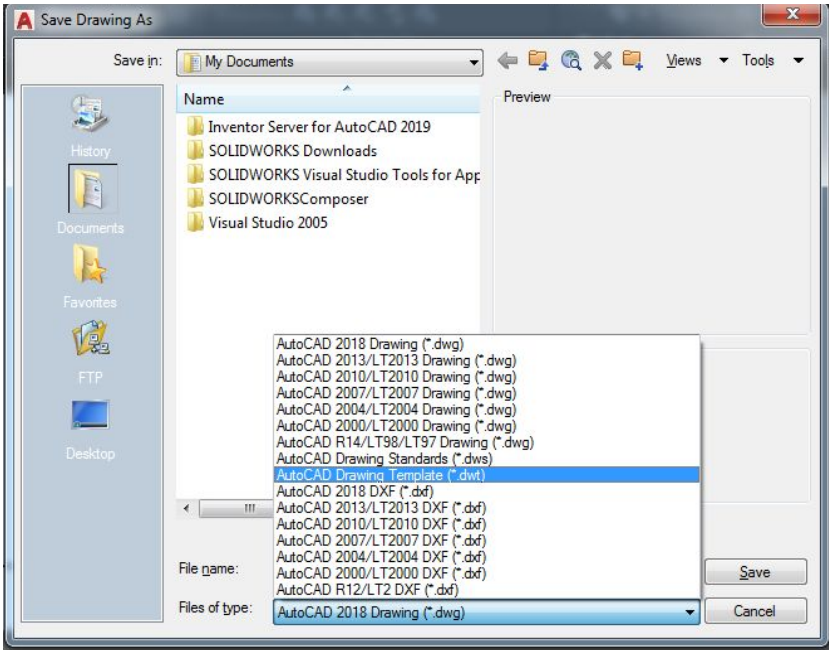

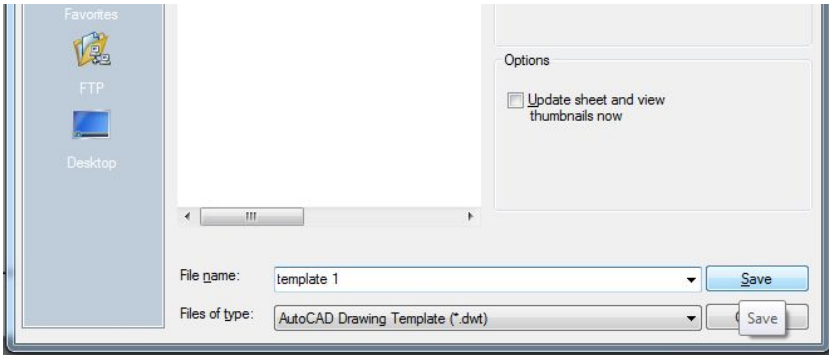

Trick:

Using template avoids unnecessary wastage of time spent on adjusting the settings & loading additional objects. In the companies, the manager or team leader is given the responsibility to prepare the template based on the conventions followed by the company. This ensures uniformity in the conventions followed.

2. Conventions of drawing lines and dimensions

Lines of different types and thicknesses are used for graphical representation of objects. The types of lines and their applications are shown in Table 2.4. Typical applications of different types of lines are shown in Figs. 2.5 and 2.6.

Table 2.4 Types of lines and their applications

Line	*Description*	*General Applications*
A ———	Continuous thick	A1 Visible outlines
B ———	Continuous thin (straight or curved)	B1 Imaginary lines of intersection B2 Dimension lines B3 Projection lines B4 Leader lines B5 Hatching lines B6 Outlines of revolved sections in place B7 Short centre lines
C ~~~	Continuous thin, free-hand	C1 Limits of partial or interrupted views and sections, if the limit is not a chain thin
D —/\/\/\—	Continuous thin (straight) with zigzags	D1 Line (see Fig. 2.5)
E — — — — — —	Dashed thick	E1 Hidden outlines
G ——— – ——— – ———	Chain thin	G1 Centre lines G2 Lines of symmetry G3 Trajectories
H	Chain thin, thick at ends and changes of direction	H1 Cutting planes
J ——— – ——— – ———	Chain thick	J1 Indication of lines or surfaces to which a special requirement applies
K ——— - - ——— - - ———	Chain thin, double-dashed	K1 Outlines of adjacent parts K2 Alternative and extreme positions of movable parts K3 Centroidal lines

AutoCAD commands:

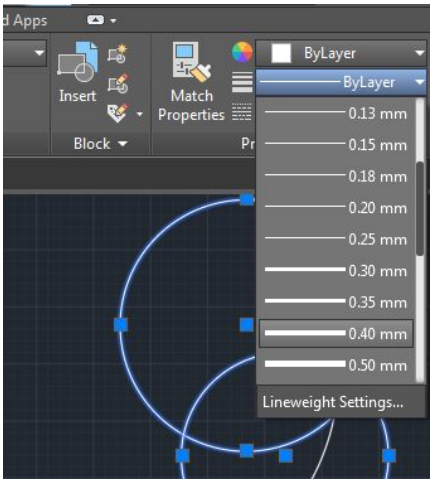

Line Weight (LW): Use this command to control & adjust the visibility of thickness of lines. In model space it will just be visible relative to screen & in layout space it will be absolute as it appears on the paper. Follow below steps to change the weight of a particular object:

1. Select the objects for which lineweight needs to be changed.
2. From the properties toolbar drop list select suitable value as shown in diagram.

Line Type (LT): Use this command to control the line style of 2D objects, Ex: hidden as dotted, axes as chain dotted etc. First we

need to load the LineTypes we would like to use in our file. Steps for that are as follows:

1. Press LT enter on keyboard to see loaded LineTypes.
2. Click on the **Load** button & double click whichever linetypes you want to use. They will be loaded.
3. Use the image on next page for reference.

Follow below steps to change the Line Weight of a particular object:

1. Select the objects for which lineweight needs to be changed.
2. From the properties toolbar drop list select suitable value as shown in diagram.

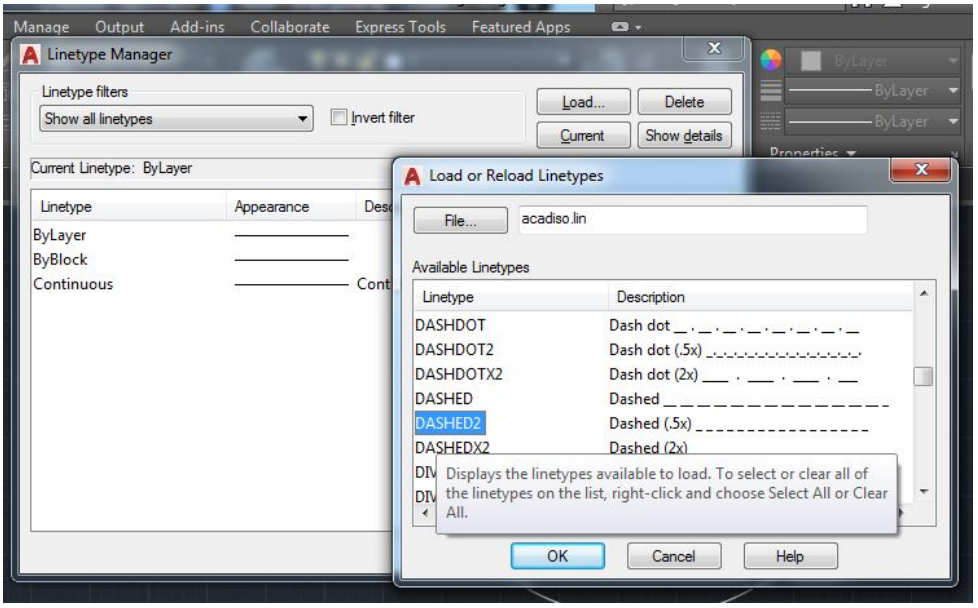

Layers (LA):

Layers are used to **control the visibility** of objects and to assign properties such as **Color**, **Line Weight** and **Line Type**. Objects on a layer normally assume the properties of that layer. However, you can override any layer property of an object. For example, if an object's color property is set to BYLAYER, the object displays the color of that layer. If the object's color is set to Red, the object displays as red, regardless of the color assigned to that layer. It is RECOMMENDED that you use Layers method:

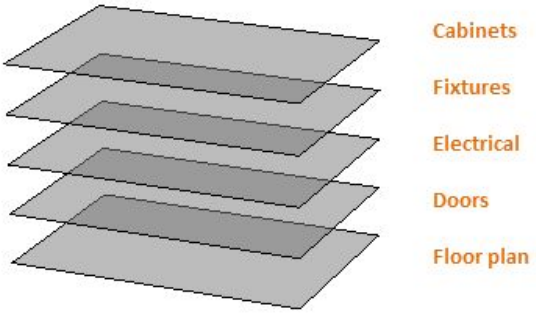

1. In Layers Properties dialog box create layers with suitable names.
2. Change the color, Lineweight, Linetype for each layer as per requirement.
3. Objects put in a particular layer will gain all the properties assigned to that layer.
4. To move objects to a particular layer:
    a. Select the objects to be moved.
    b. From Layers dropdown select the layer to which you want to move the objects.

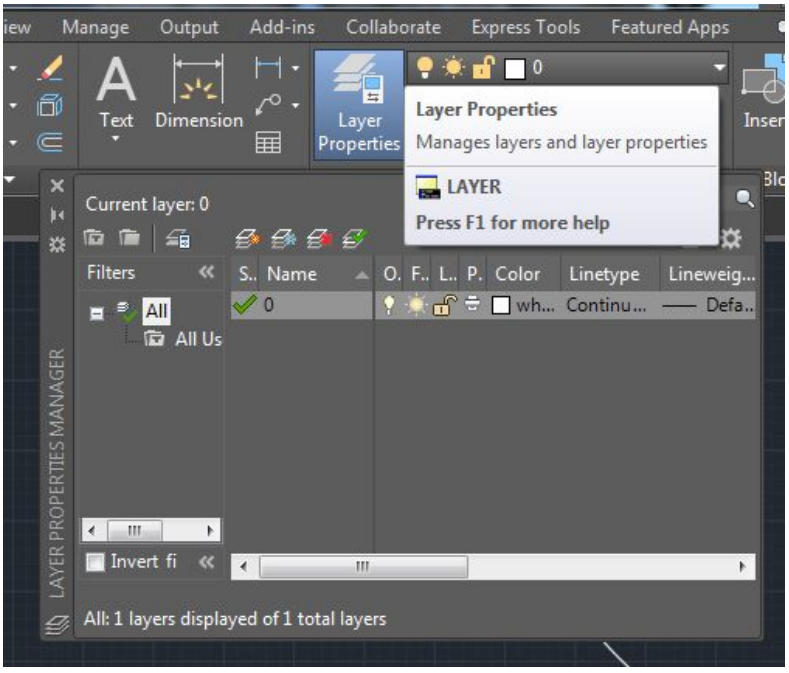

c. Ensure that the properties of the object are set to "ByLayer" or else the object will not take up the properties from Layer.

MAtch properties command: To copy formatting of one object to others.

1. Press MA enter on keyboard.
2. Select the object with desired properties.
3. Select object you want to have the same desired properties.

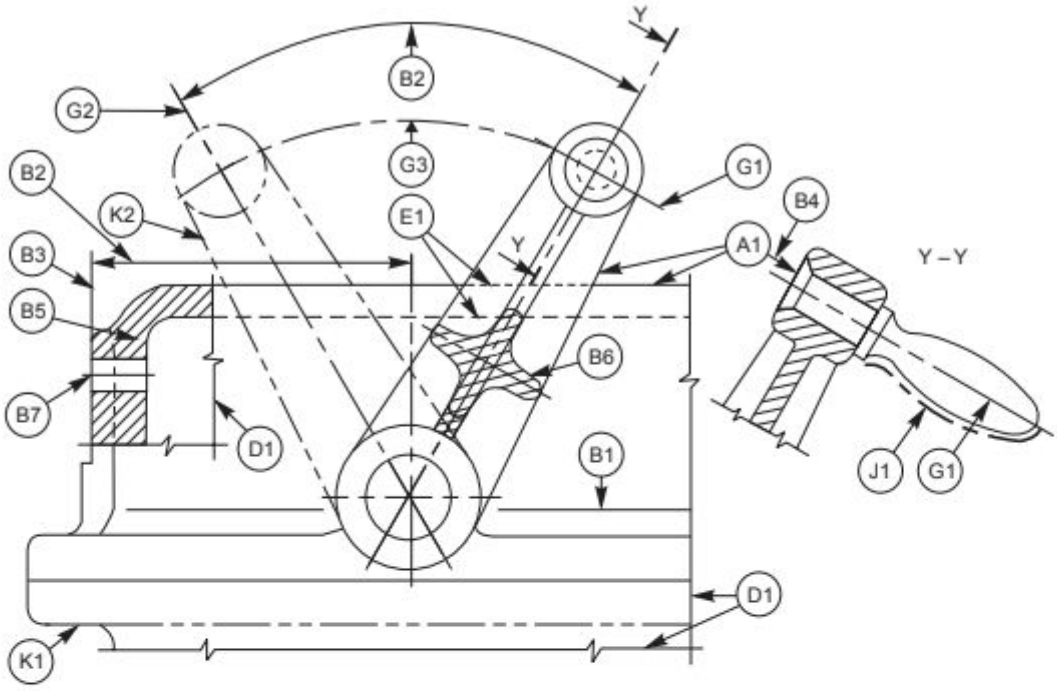

Fig. 2.5 Applications of lines

The elements of dimensioning include the projection line, dimension line, leader line, dimension line termination, the origin indication and the dimension itself. The various elements of dimensioning are shown in Figs. 2.28 and 2.29. The following are some of the principles to be adopted during execution of dimensioning:

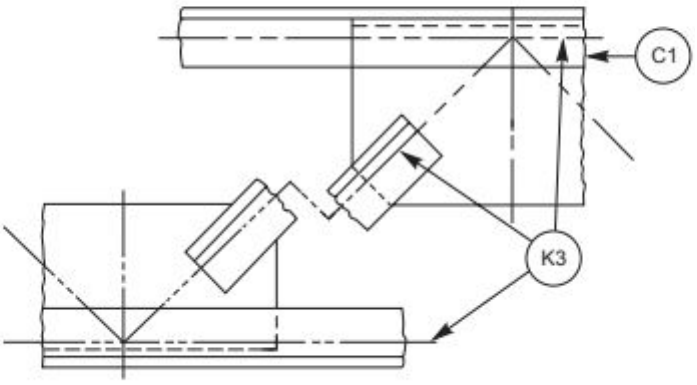

Fig. 2.6 Applications of lines

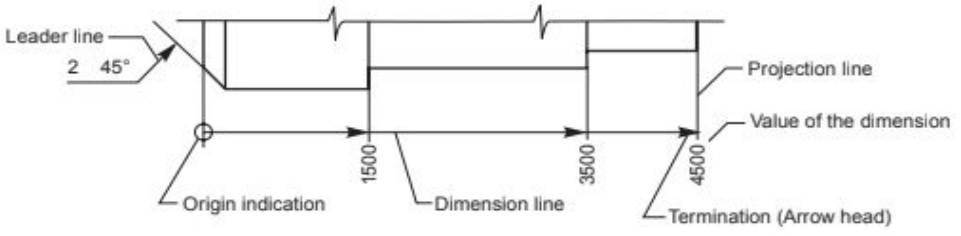

Fig. 2.28 Elements of dimensioning

Conventions:

1. Projection and dimension lines should be drawn as thin continuous lines.
2. Projection lines should extend slightly beyond the respective dimension lines.
3. Projection lines should be drawn perpendicular to the feature being dimensioned. Where necessary, they may be drawn obliquely, but parallel to each other (Fig. 2.30). However, they must be in contact with the feature.
4. Projection lines and dimension lines should not cross each other, unless it is unavoidable (Fig. 2.31).
5. A dimension line should be shown unbroken, even where the feature to which it refers, is shown broken (Fig. 2.32).
6. A centre line or the outline of a part should not be used as a dimension line, but may be used in place of projection line (Fig. 2.31).

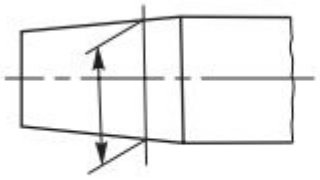

Fig. 2.30

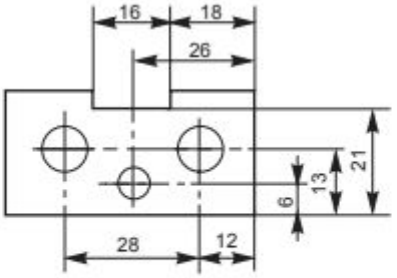

Fig. 2.31

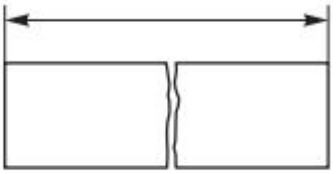

Fig. 2.32

Tip:

To speed up the drafting process draw some lines and apply the desired properties on them before saving the template file. Then while drafting a design the same properties can be copied to other objects by using Match Properties command.

Creating a Template with required settings

Aim:

To create a template file with following settings:

1. Layout with **A4 Paper** & **Title Block**. (Set the zoom to 1xp.)
2. Layer named Solids with **Lineweight 0.8mm**.
3. Layer named Dimensions with **Lineweight 0.35mm**.
4. Layer named Hidden with **Lineweight 0.4mm** & **Linetype - Dashed2**.
5. Layer named Axis & others with default lineweight & **Linetype - Center2**.
6. Text Style set to **Simplex.shx**.
7. Set Dimension **text height** & **arrow size** to **4,** text alignment to **ISO standard.**

Apparatus:

Hardware: Desktop System with i3 processor, 8 GB RAM, Graphics Card & 250 GB HDD.
Software: Windows 7 64 bit OS, _____ Package.

Commands:

Startup, Lineweight (LW), Linetype (LT), Layers (LA), Save as, Line (L), Text (DT), Text Style (ST), Dimension Style (D), Layout

Procedure:

1. Open the AutoCAD Software on the system.
2. Set the paper size to A4 from Layout settings
    a. Right click on the Layout and select the Page Setup Manager and select A4 Sheet and choose Landscape and close it.
3. Set the scale in Zoom option select the Scale and enter the value as 0.5xp.
4. Create the Title Block by drawing rectangle of 170X65 and Explode by command 'X' and take the offset of the lines and complete the Title Block table as shown in diagram.
5. Create a Layer the command is LA and select the number of layer required and name them and set the properties like line lineweight, linetype.
6. Set the Text Style by the command DT and change the text style by command ST and choose the Font Name simplex.shx and set current apply and close.
7. Set the Dimension by command D and modify text height and arrow size to 4, text alignment to ISO standard.
8. For Saving the file save as in that files of type should be AutoCAD Drawing Template and name the file and save in the drive and give the Description and save it. By these template it will be easy for the Drawing and the setup will be ready with the settings.

3. Convention for sectional views.

The cutting plane(s) should be indicated by means of type H line. The cutting plane should be identified by capital letters and the direction of viewing should be indicated by arrows. The section should be indicated by the relevant designation (Fig. 2.15).

In principle, ribs, fasteners, shafts, spokes of wheels and the like are not cut in longitudinal sections and therefore should not be hatched (Fig. 2.16).

Figure 2.17 represents sectioning in two parallel planes and Fig. 2.18, that of sectioning in three continuous planes.

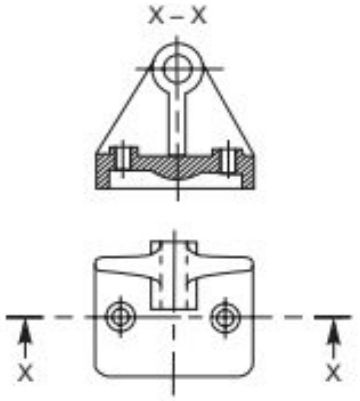

Fig. 2.15 Cutting plane indication

1. Half Section: Symmetrical parts may be drawn, half in plain view and half in section (Fig 2.23).

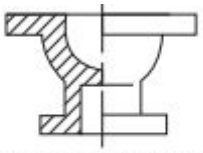

Fig. 2.23 Half section

2. Local Section: A local section may be drawn if half or full section is not convenient. The local break may be shown by a continuous thin free hand line

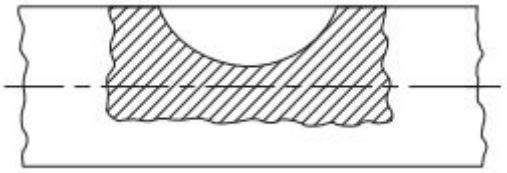

3. Arrangement of successive sections: Successive sections may be placed separately, with designations for both cutting planes and sections (Fig. 2.25) or may be arranged below the cutting planes.

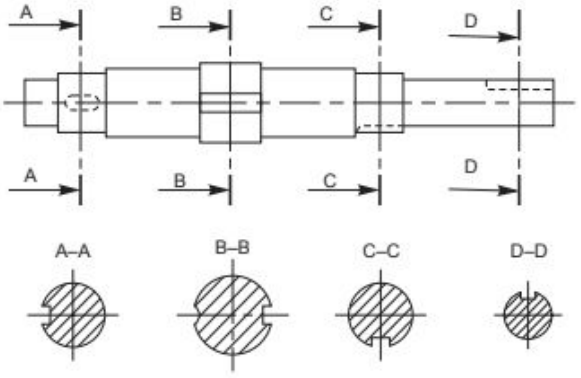

Fig. 2.25 Successive sections

Orthographic Sectional Views

1. Draw the sectional Front view & Left side view along with Top View.

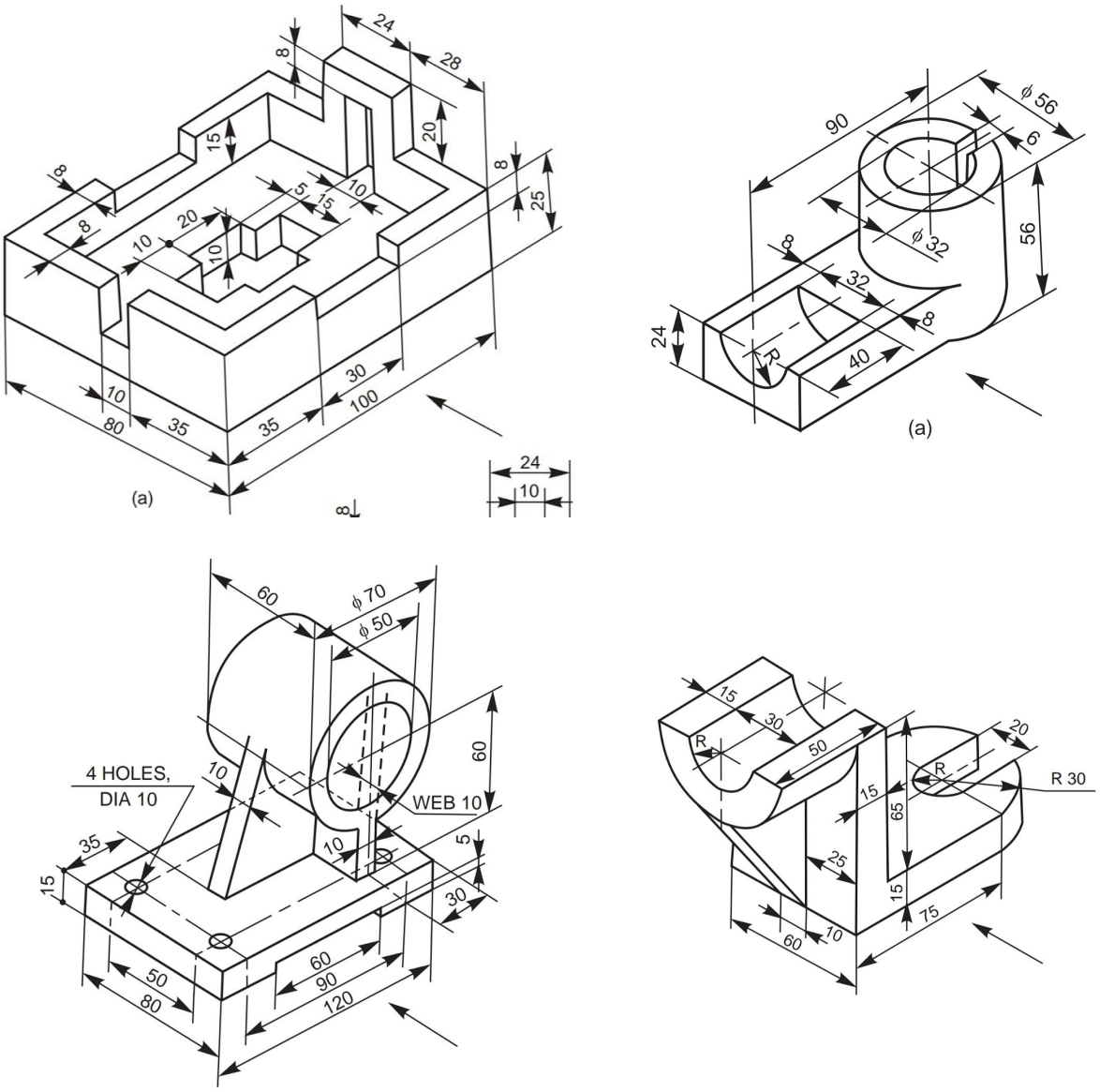

2. Draw the sectional Front & Sectional Left side views along with Top View.

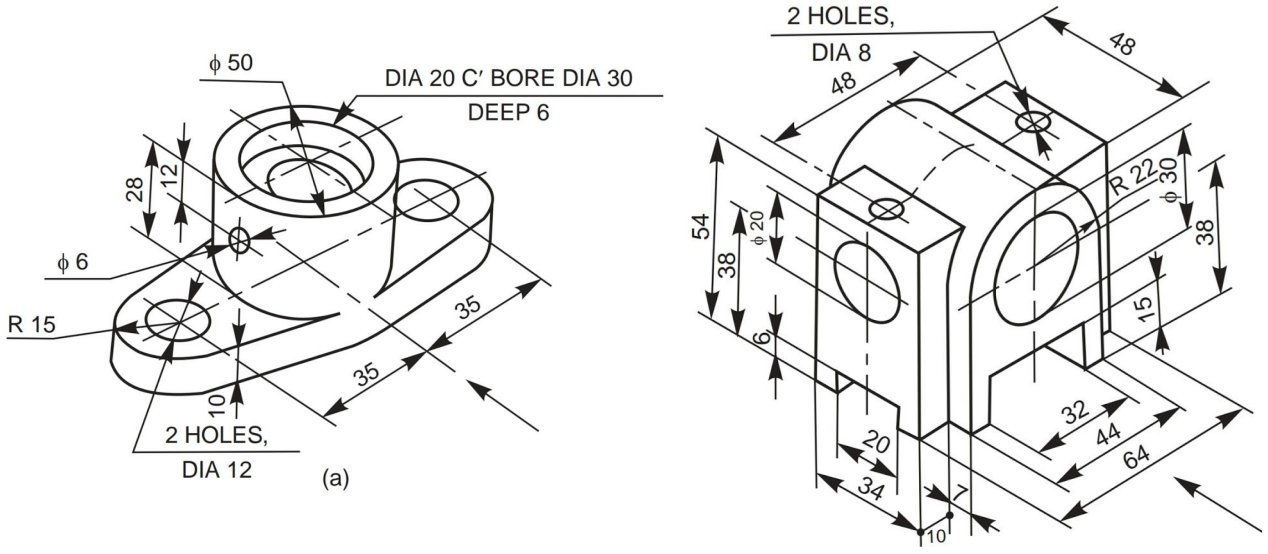

3. Draw the sectional Right View & Front View along with Top View. (Solution is given)

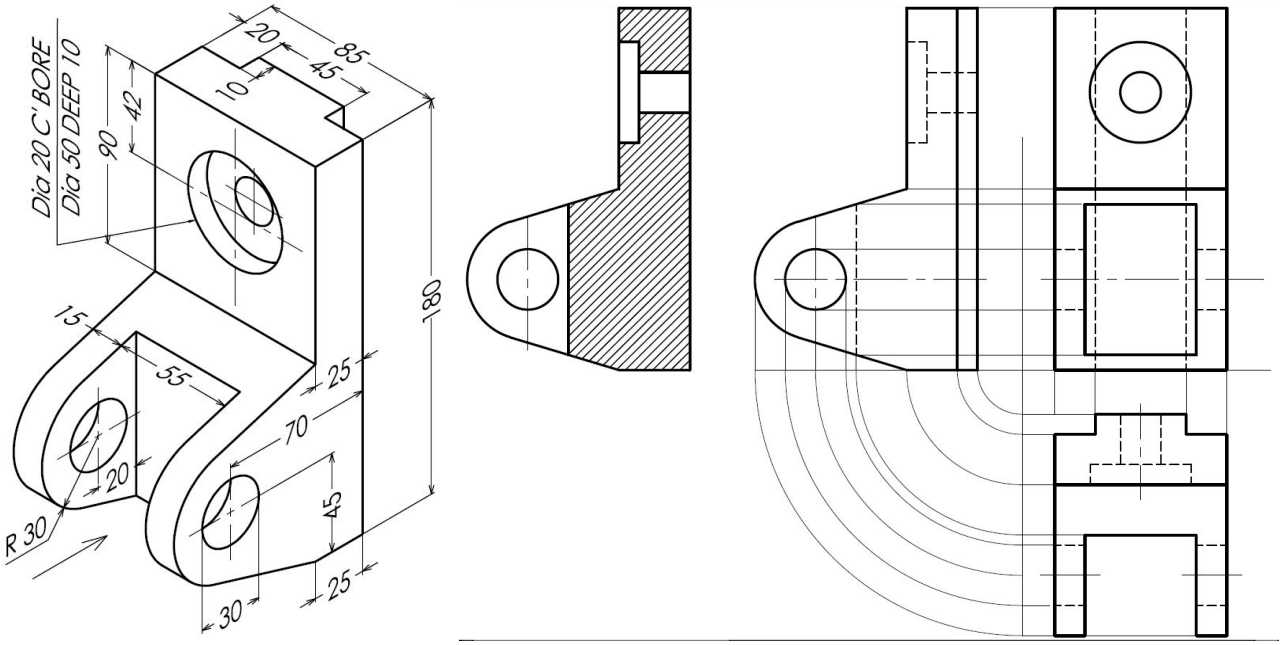

4. Draw the sectional Front View, Right Side View & Top View of the component given below. (Solution is given)

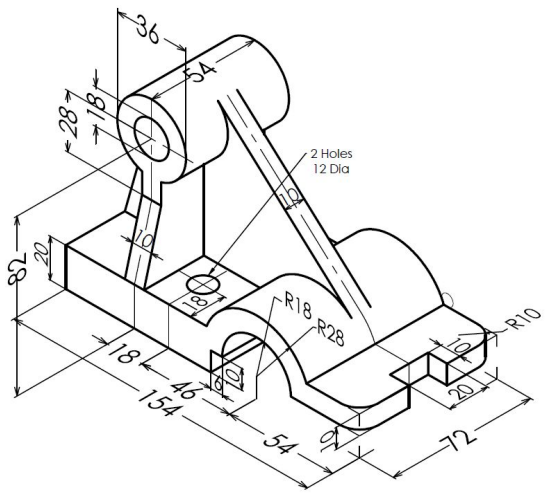
36
54
28
18
2 Holes
12 Dia
10
82
20
10
18
R18
R28
R10
18
46
154
54
72
20

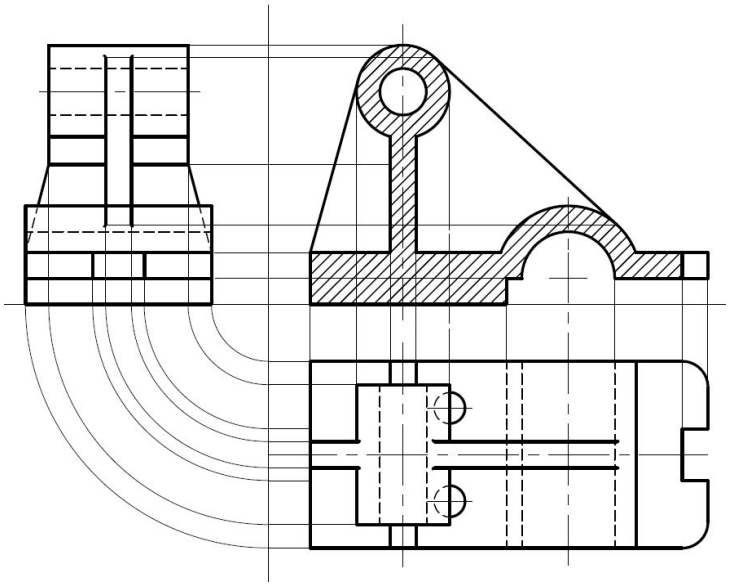

4. Simple Machine Elements.

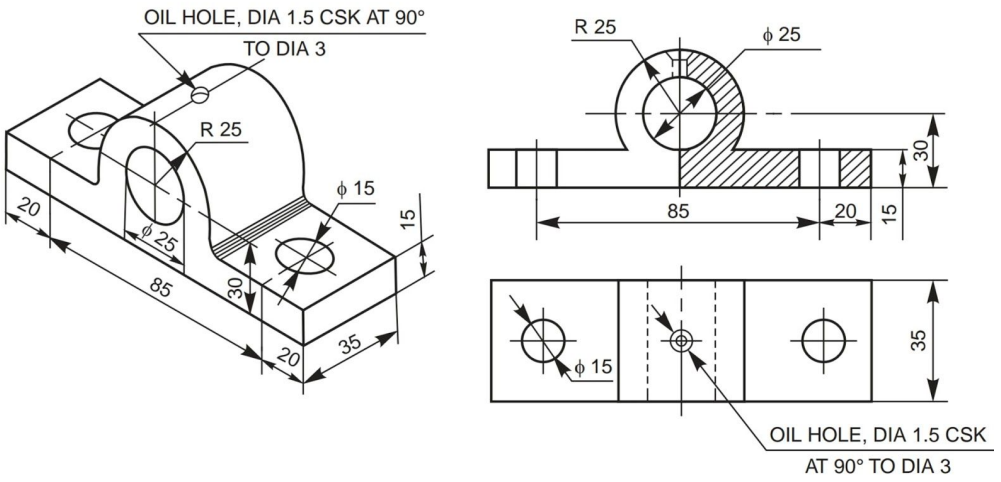

Fig. 12.2 Solid journal bearing

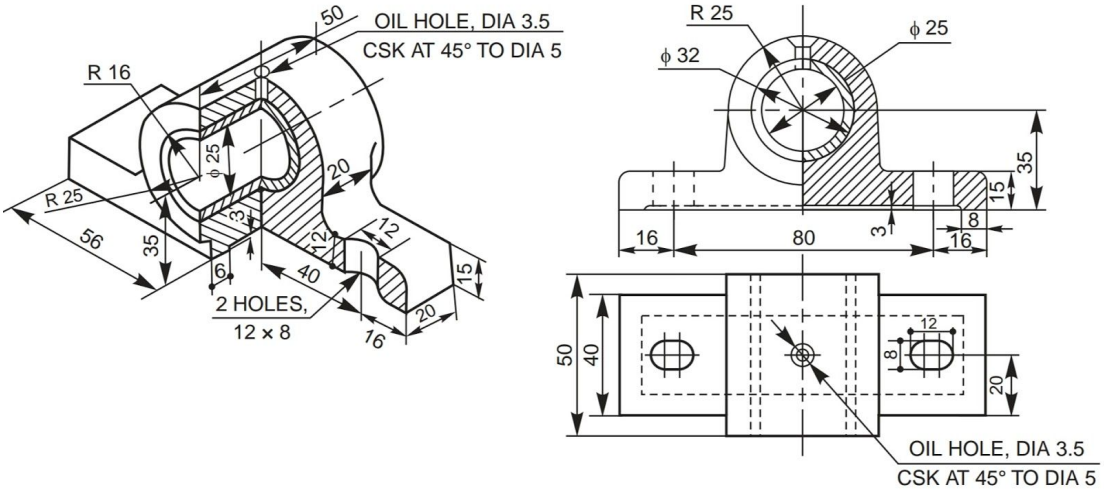

Fig. 12.3 Bushed journal bearing

Keys & Cotters

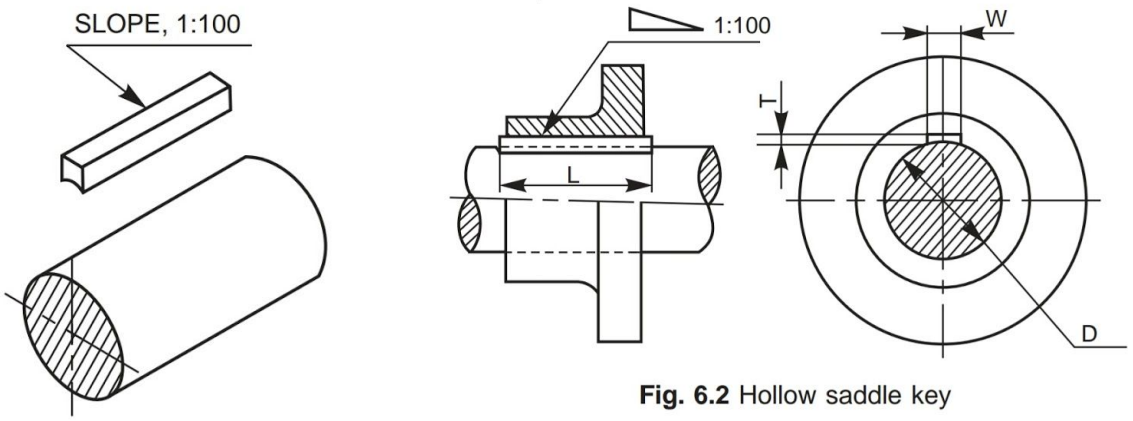

Fig. 6.2 Hollow saddle key

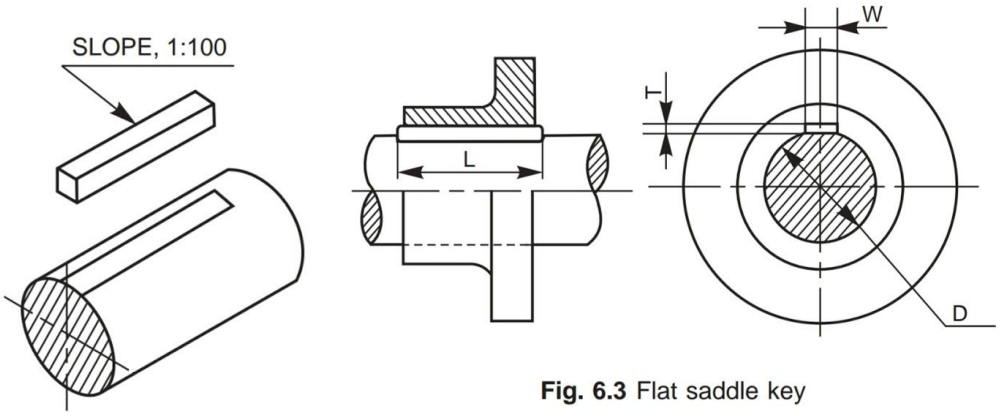

Fig. 6.3 Flat saddle key

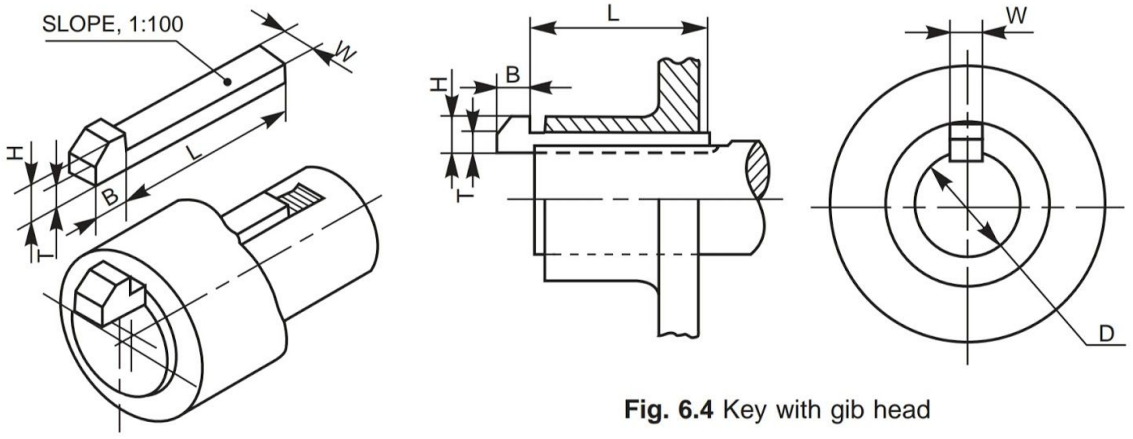

Fig. 6.4 Key with gib head

Feather Keys

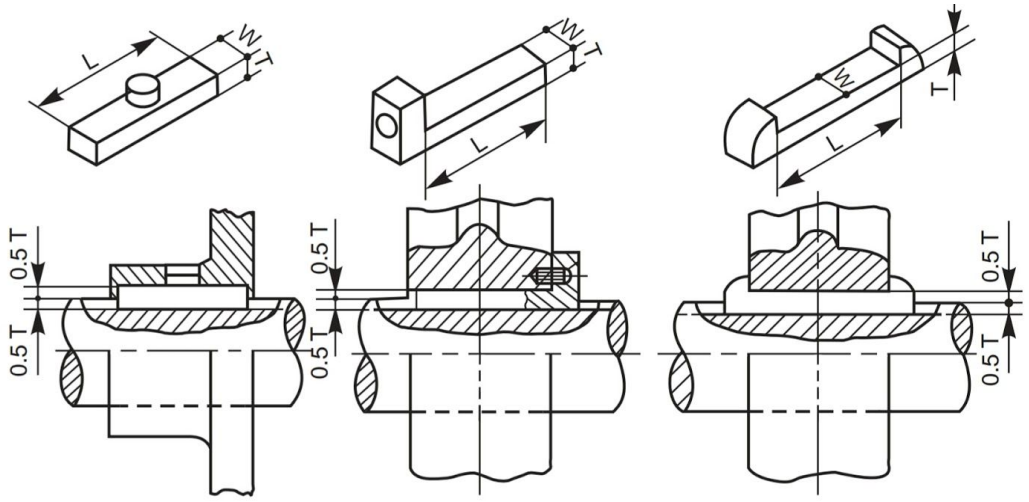

CASTING: Steps involved in making a casting-Advantage of casting and its applications. Patterns and Pattern making-Types of patterns -Materials used for patterns, pattern allowances and their construction, Principles of Gating, Gating ratio and design of Gating systems

5. Riveted And Screwed Fastenings.

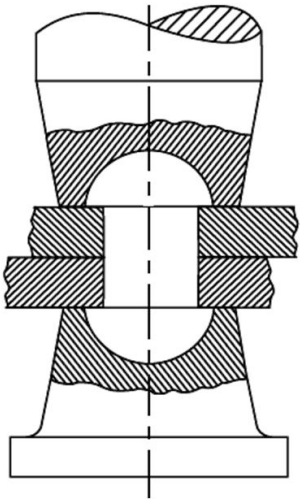

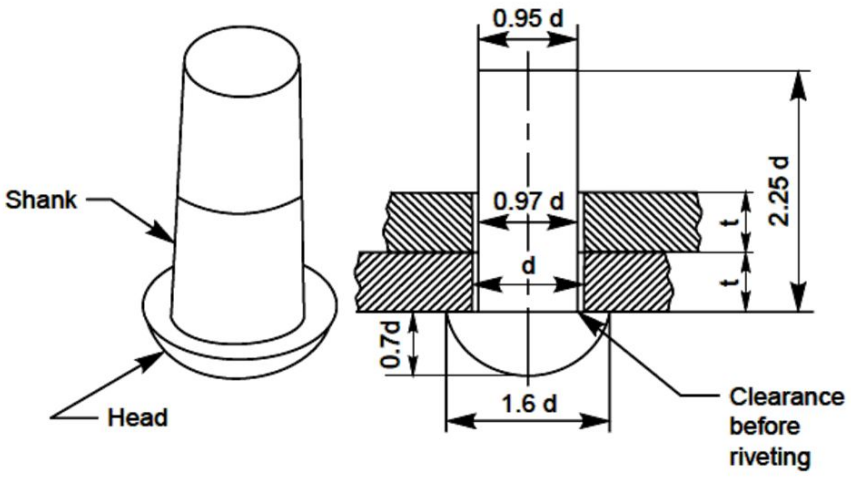

Experiment

Aim: Draw all the rivet heads using dimensions below. Then use them to solve the following problems.

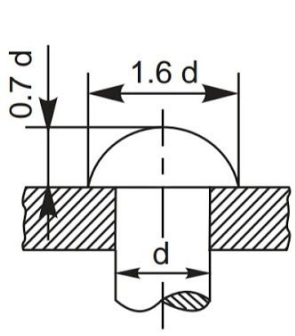

Snap head

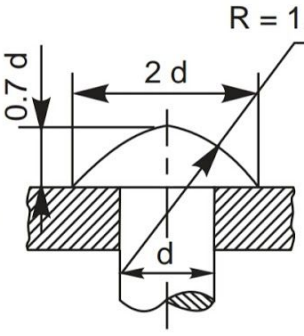

High button head

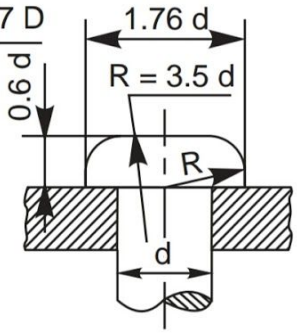

Pan head

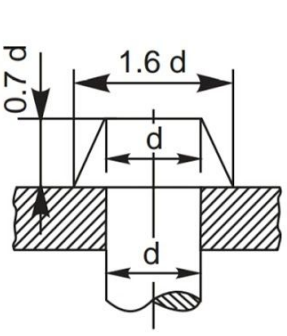

Cone head

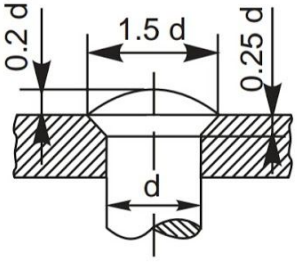

Round top countersunk head

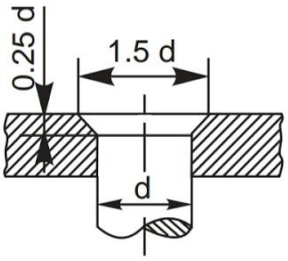

Flush counter-sunk head

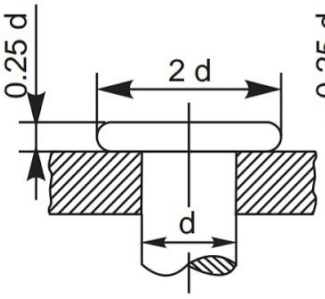

Flat head

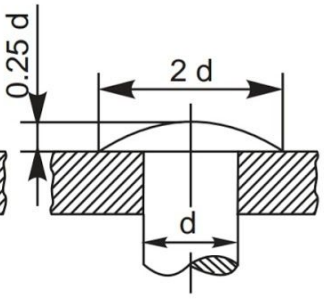

Truss head

Other important formulae:

$t_1 = 1.125t$ - thickness of the single strap plate.

$t_2 = 0.75t$ - thickness of the double strap plate.

P = 3d - Distance between adjacent rows of rivets

$P_r = 0.8P$ (for chain riveting) - distance between adjacent columns of rivets.

$P_r = 0.6P$ (for zig zag riveting) - distance between adjacent columns of rivets.

Question No 1

Draw sectional front view & broken top view of a **Single riveted lap joint** for sheets of thickness, t=16mm. Use **snap head type** of rivet head.

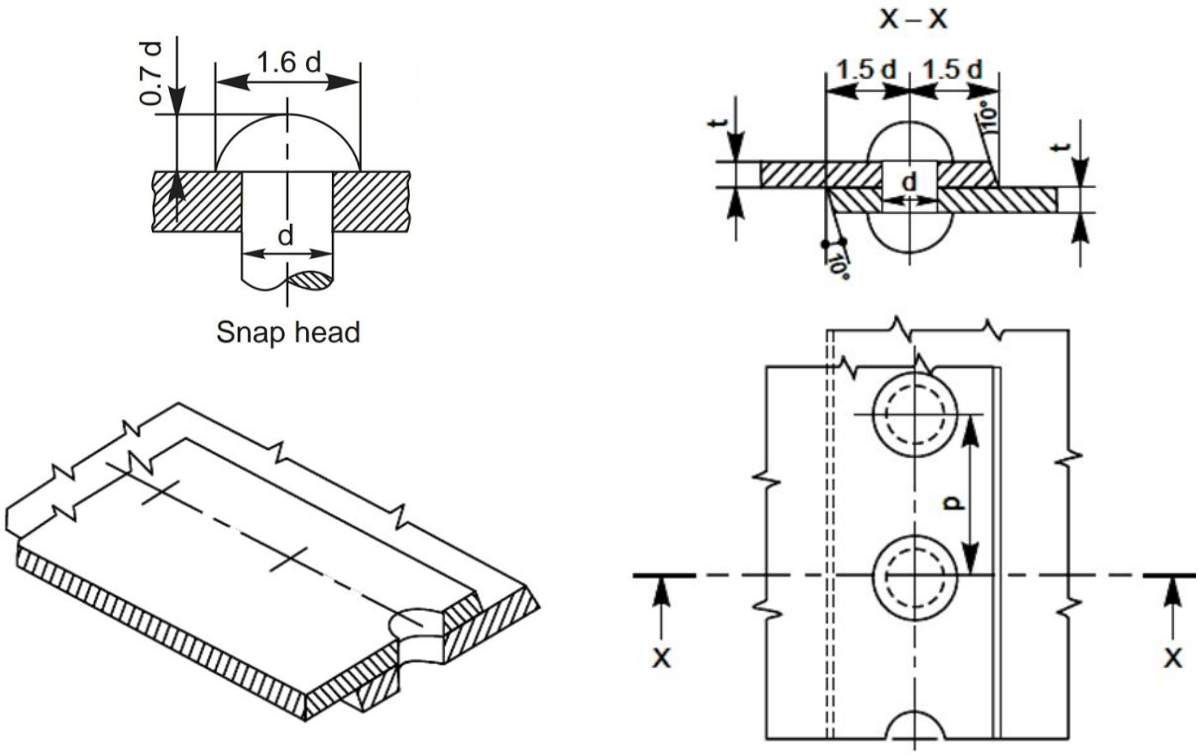

Question No 2

Draw sectional front view & broken top view of a **Double riveted chain lap joint** for sheets of thickness, t=12mm. Use high button head type of rivet head.

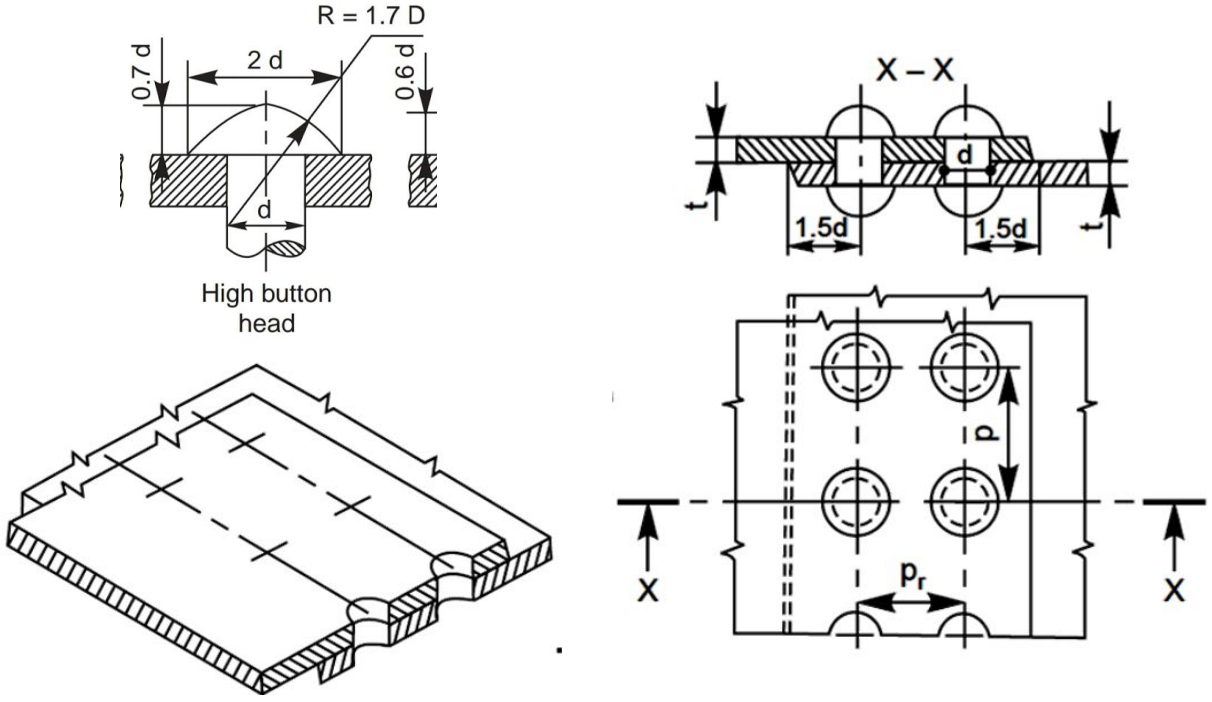

Question No 3

Draw sectional front view & broken top view of a **Double riveted zig zag lap joint** for sheets of thickness, t=12mm. Use **Pan Head** type of rivet head.

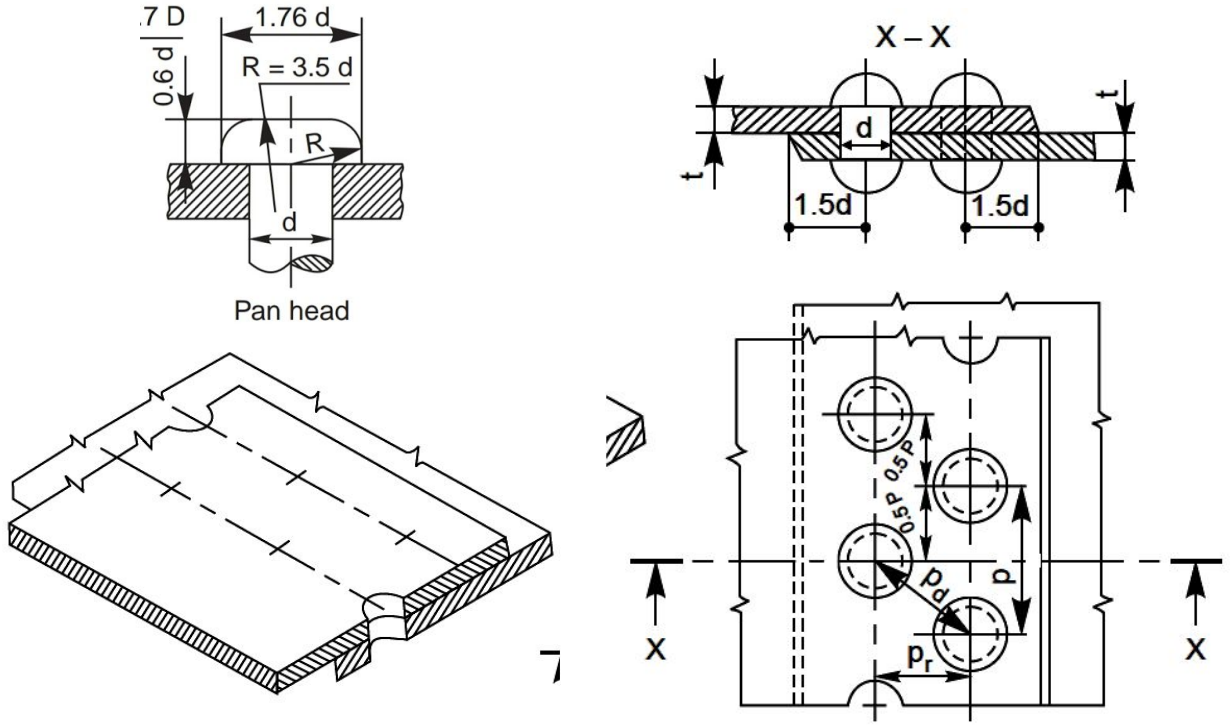

Question No 4

Draw sectional front view & broken top view of a **Single strapped Single riveted butt joint** for sheets of thickness, t=12mm. Use **Cone Head** type of rivet head.

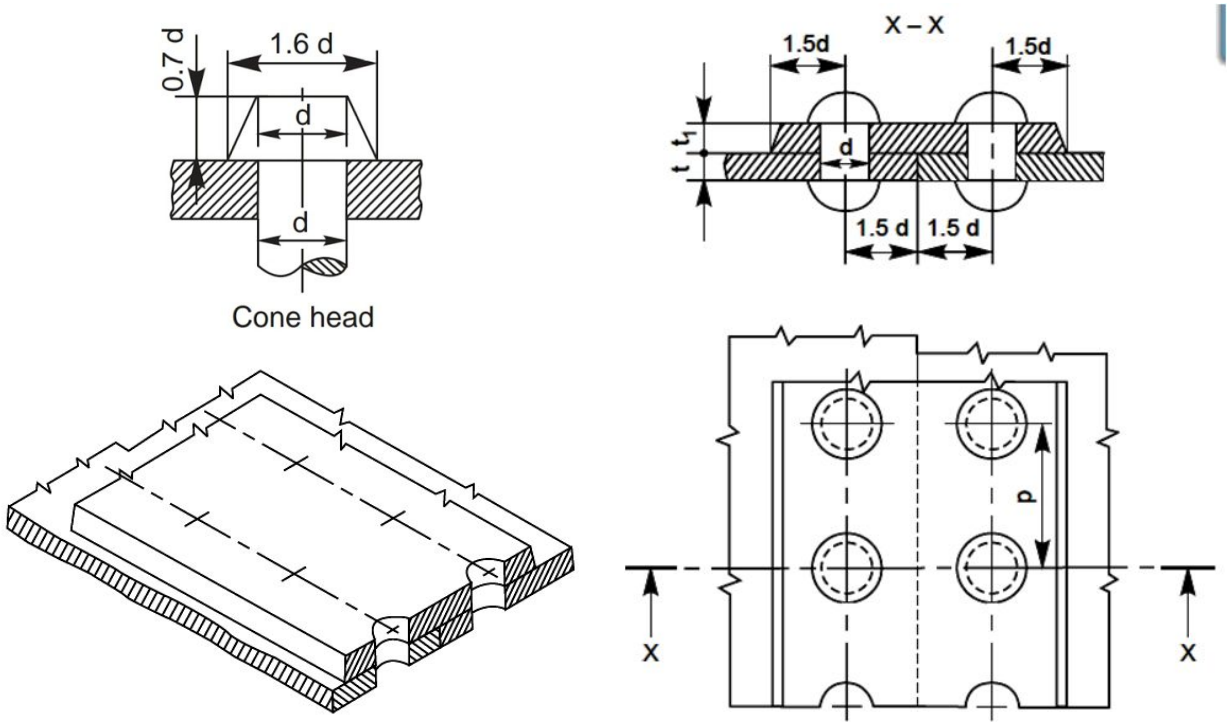

Question No 5

Draw sectional front view & broken top view of a **Single strapped Double riveted chain butt joint** for sheets of thickness, t=9mm. Use **Flat Head** type of rivet head.

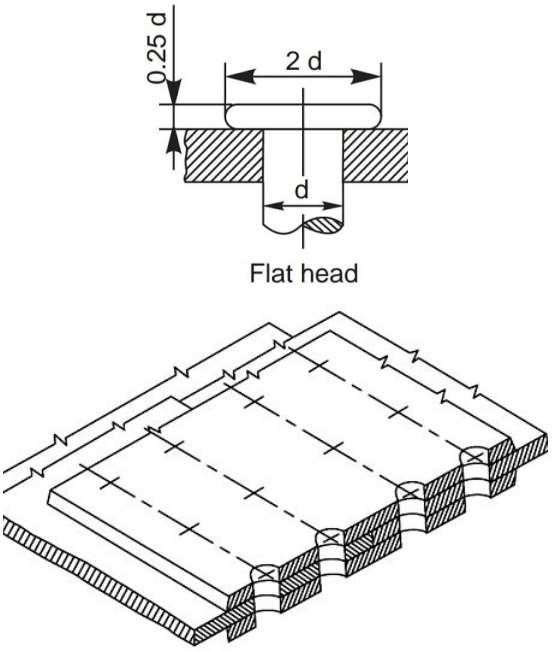

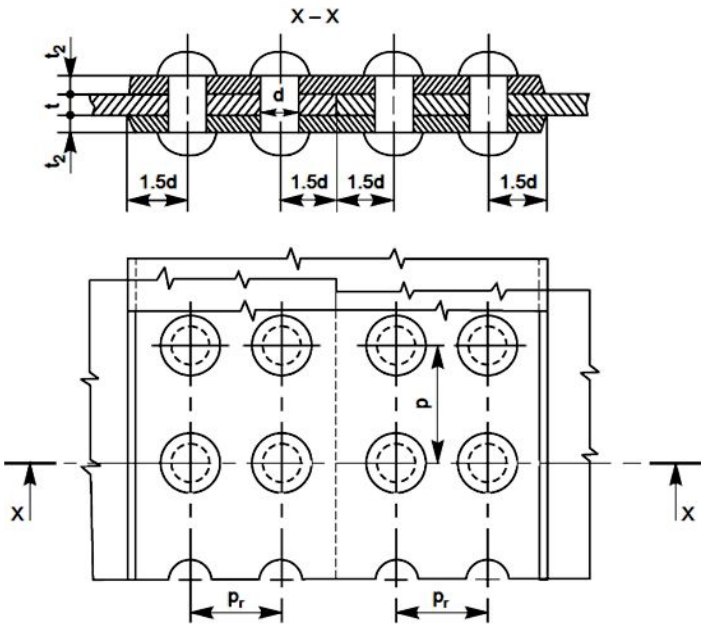

Question No 6

Draw sectional front view & broken top view of a **Double strapped double riveted zig zag butt joint** for sheets of thickness, t=9mm. Use **Round Top Countersunk** type of rivet head.

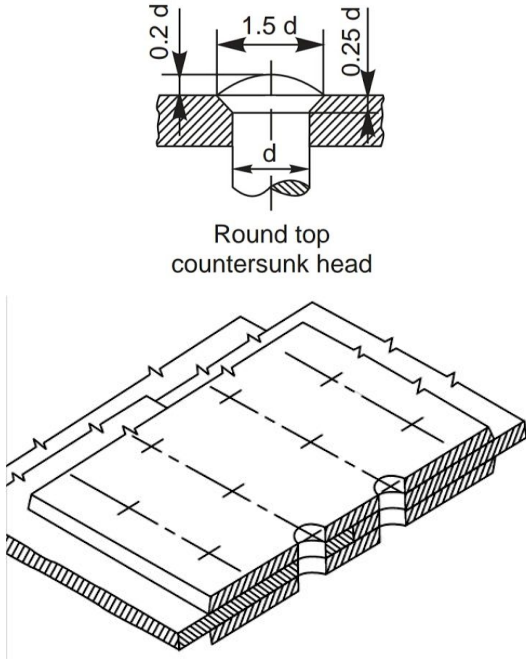

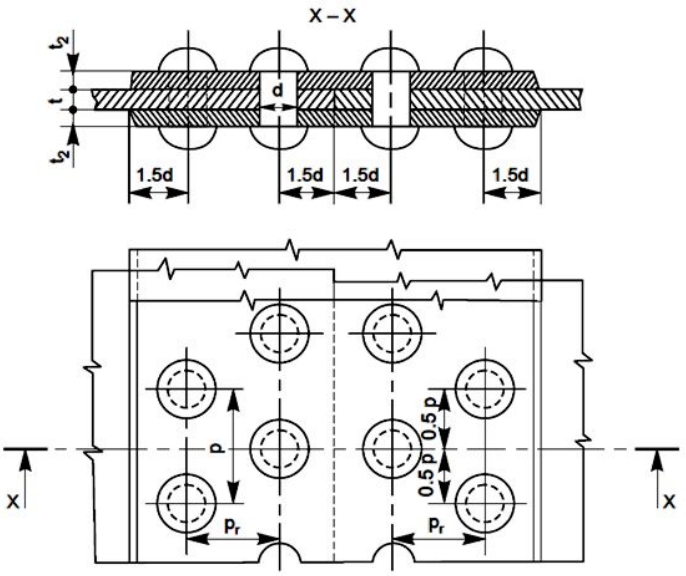

Nut & Bolt Assemblies, Stud & Tap Bolts, Set Screws

Draw the front view top view and side view of a hexagonal bolt and nut assembly.

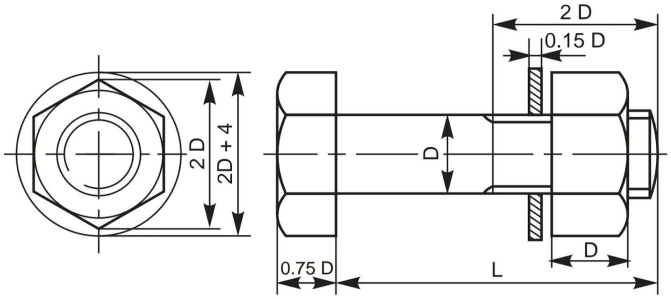

Fig. 5.17 A hexagonal headed bolt with a nut and a washer in position

Draw the front view, side view and a top view of a square bolt and nut assembly.

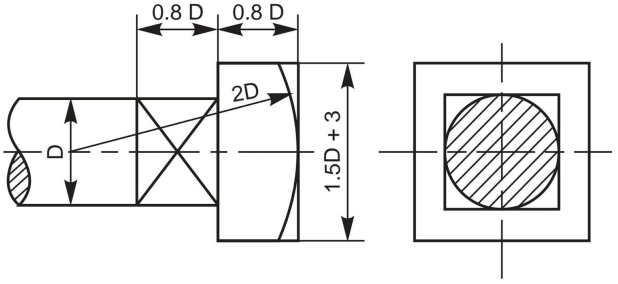

Fig. 5.18 Square headed bolt with square neck

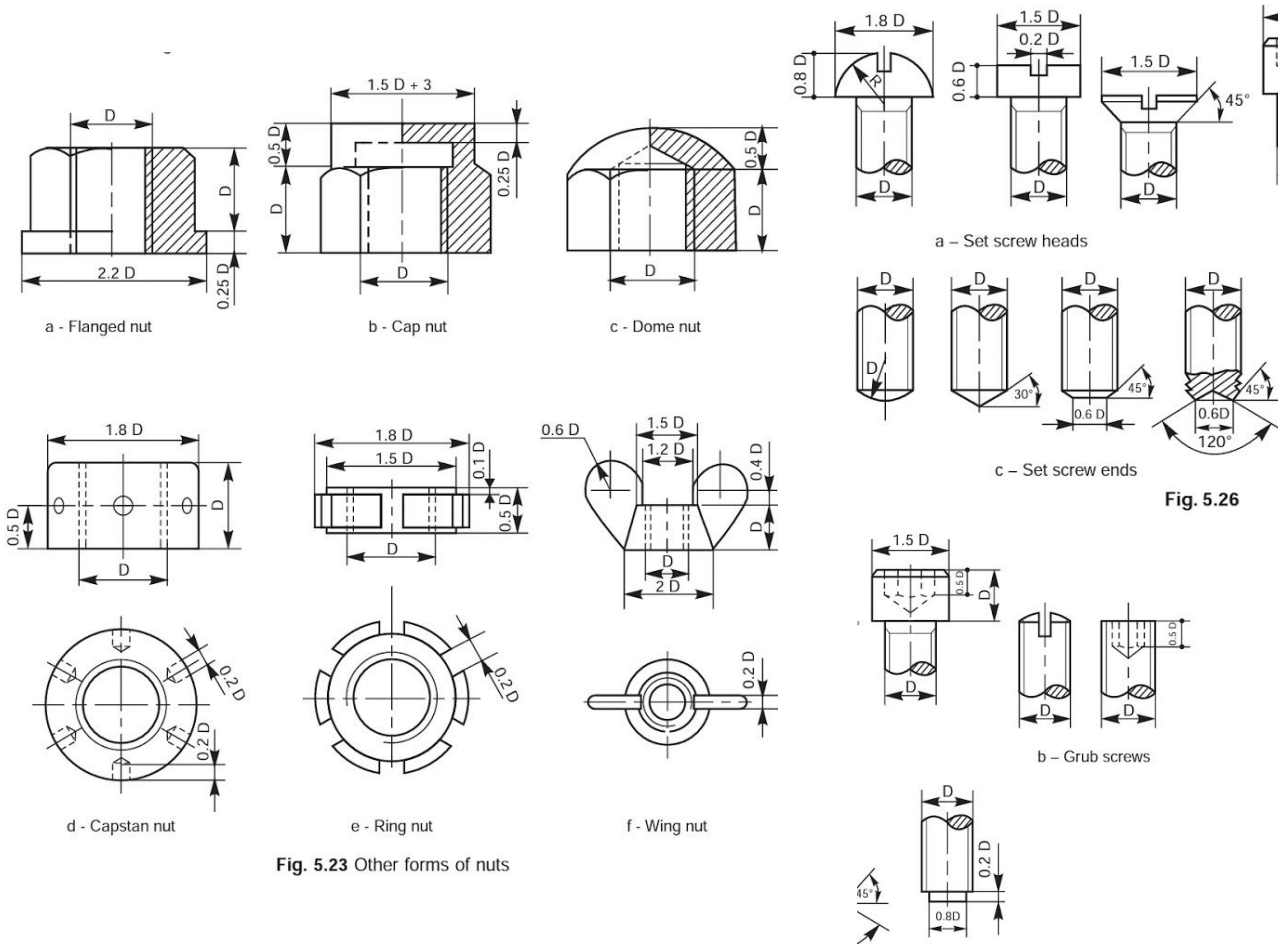

Fig. 5.23 Other forms of nuts

Fig. 5.26

6. Joints And Coupling.

Double Cottered Joint / Cottered Joint with Sleeve

Draw a double riveted joint with diameter of shaft as **20mm** assuming suitable ratios.

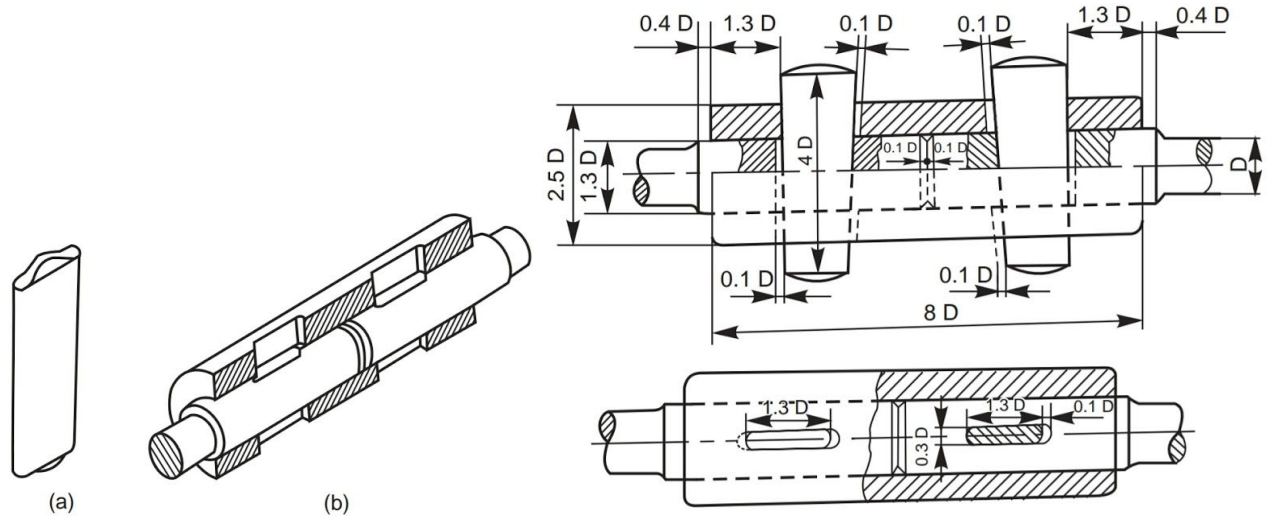

Cotter Joint with Socket Spigot Joint

Draw a socket spigot joint for a shaft of diameter **24mm**. Use suitable ratios.

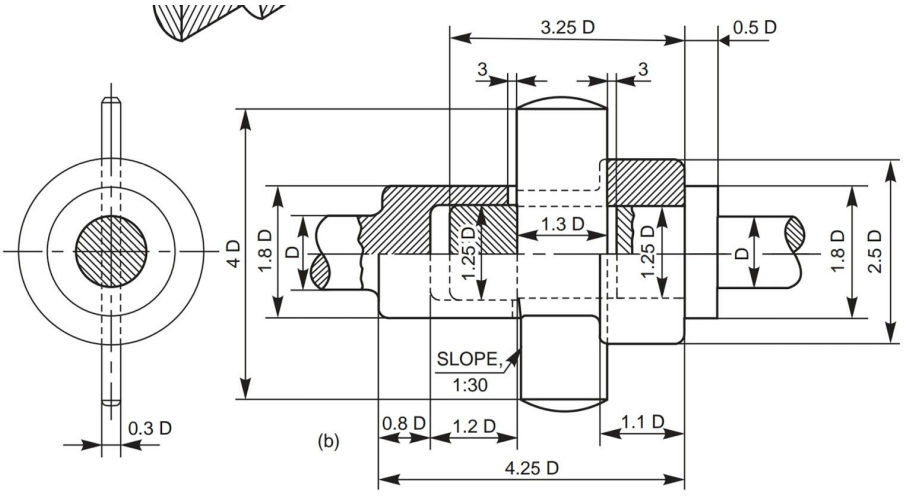

Fig. 6.13 Cotter joint with socket and spigot ends

Knuckle Joint

Draw a Knuckle Joint for a shaft of diameter **20mm** using suitable ratios.

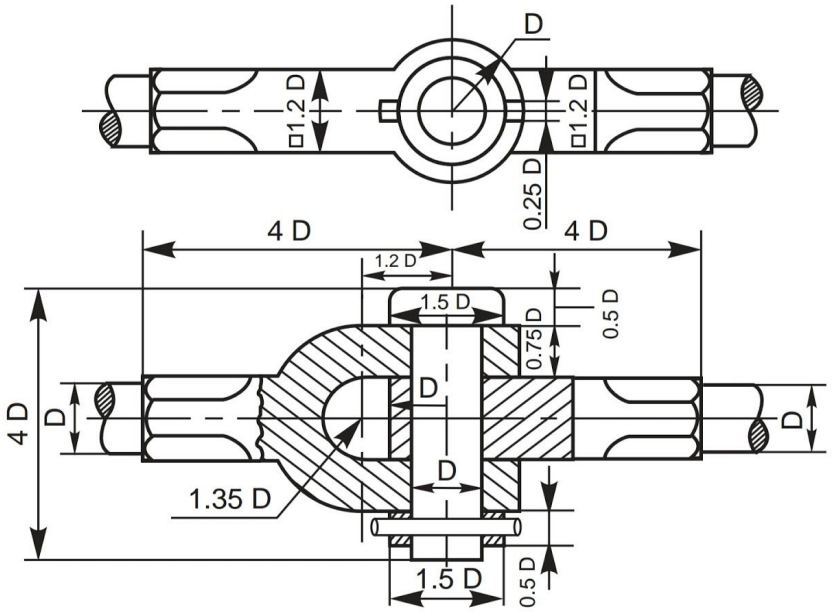

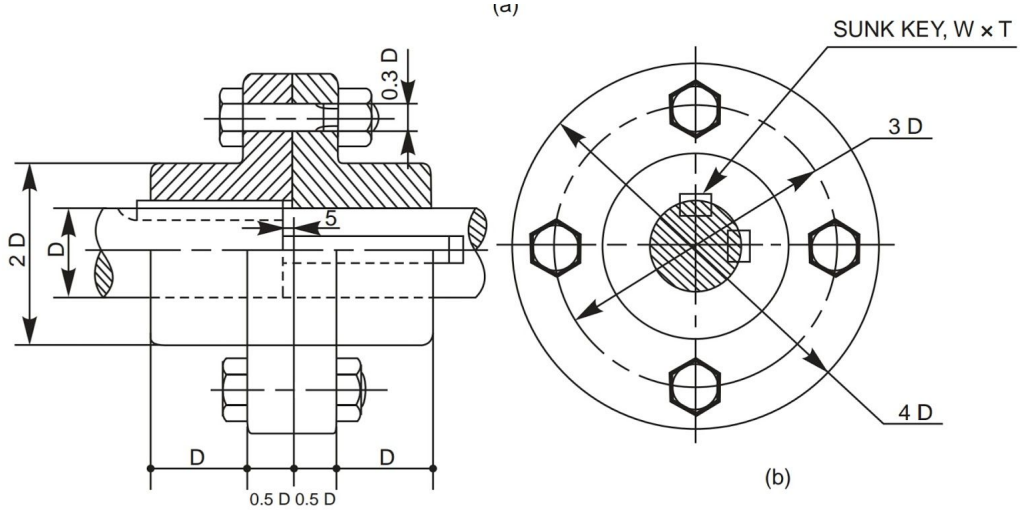

Fig. 7.4 Flanged coupling

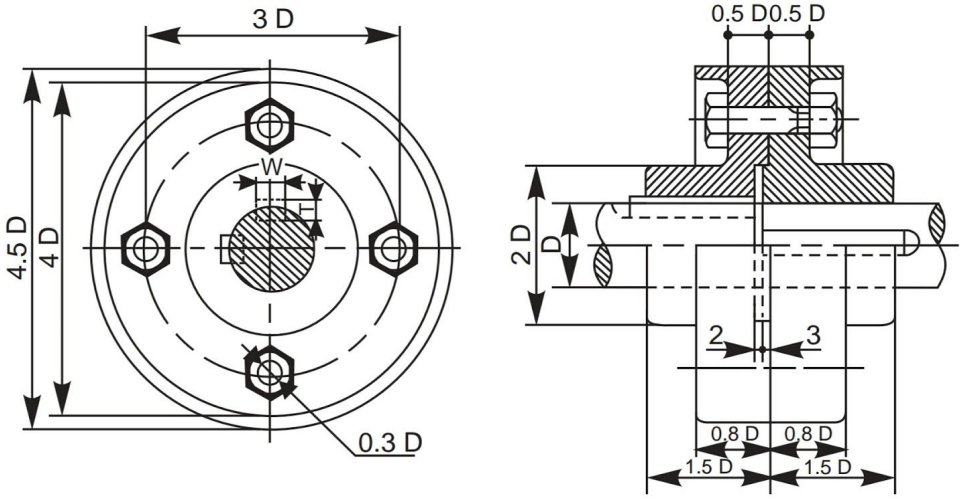

Fig. 7.5 Protected flanged coupling

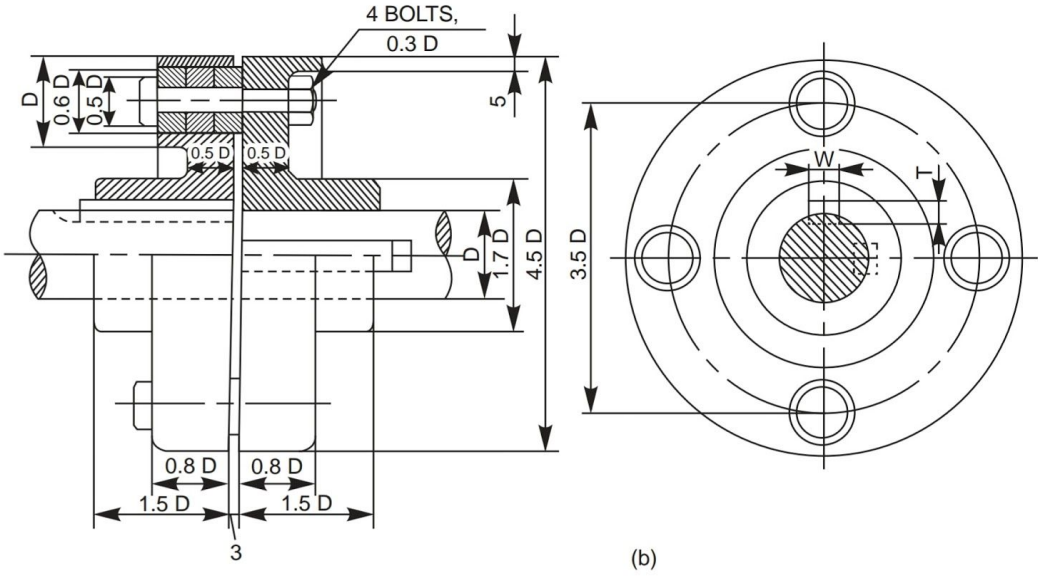

Fig. 7.7 Bushed pin type flanged coupling

II. Assembly drawing (SOLIDWORKS/ CATIA/ PRO-E)

Assembly No 1: Stuffing Boxes

Aim:

To model the stuffing box assembly from given dimensions using available CAD package.

Apparatus:

Hardware: Desktop System with i3 processor, 8 GB RAM, Graphics Card & 250 GB HDD.
Software: Windows 7 64 bit OS, _____ Package.

Commands / Features used (in following modules):

Sketcher:
Part:
Assembly:
Drawing:

Question Diagram:

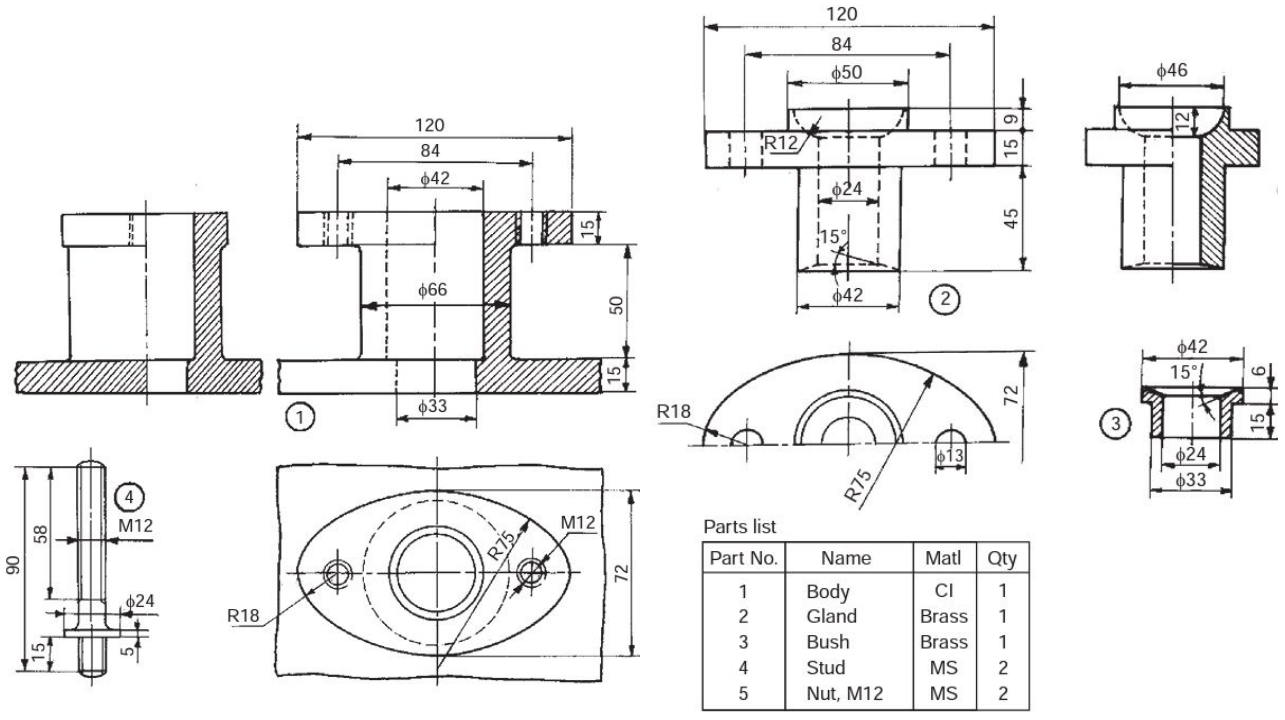

Parts list

Part No.	Name	Matl	Qty
1	Body	CI	1
2	Gland	Brass	1
3	Bush	Brass	1
4	Stud	MS	2
5	Nut, M12	MS	2

Fig. 18.1 Stuffing box

Procedure:

1. Model all the parts given in parts module & apply material as shown in the parts table.
2. Assembly the parts suitably using assembly module.
3. Draft the assembly, mark part numbers using balloons & take print of the same.
4. Note down the following values:
    a. Total mass of the assembly = _____
    b. Distance between center of gravity of each part from its lower most point when it is placed vertically? _____

Precautions:

1. Do not save your files on desktop or C drive. (They will be automatically erased on system restart.)
2. Save your file in the D drive in a folder of your name or roll number.
3. Don't install, uninstall or change any setting the system.
4. Don't tamper or exchange any hardware (mouse/keyboard etc)
5. Inform about any malfunctions to the instructor right away.

Viva Questions:

1. What are the applications of Stuffing Box?
2. What type of fitting is used between the following pairs & why?
    a. Body & Gland
    b. Body & Bush
    c. Gland & Piston Shaft
    d. Bush & Piston Shaft
3. What is the total mass of the assembly after applying the materials mentioned in the Parts Table? _____
4. What is the height of center of gravity of each part from its lower most point when it is placed vertically? _____

Assembly No 2: Cross Heads

Aim:

To model the cross heads assembly from given dimensions using available CAD package.

Apparatus:

Hardware: Desktop System with i3 processor, 8 GB RAM, Graphics Card & 250 GB HDD.
Software: Windows 7 64 bit OS, _____ Package.

Commands / Features used (in following modules):

Sketcher:
Part:
Assembly:
Drawing:

Question Diagram:

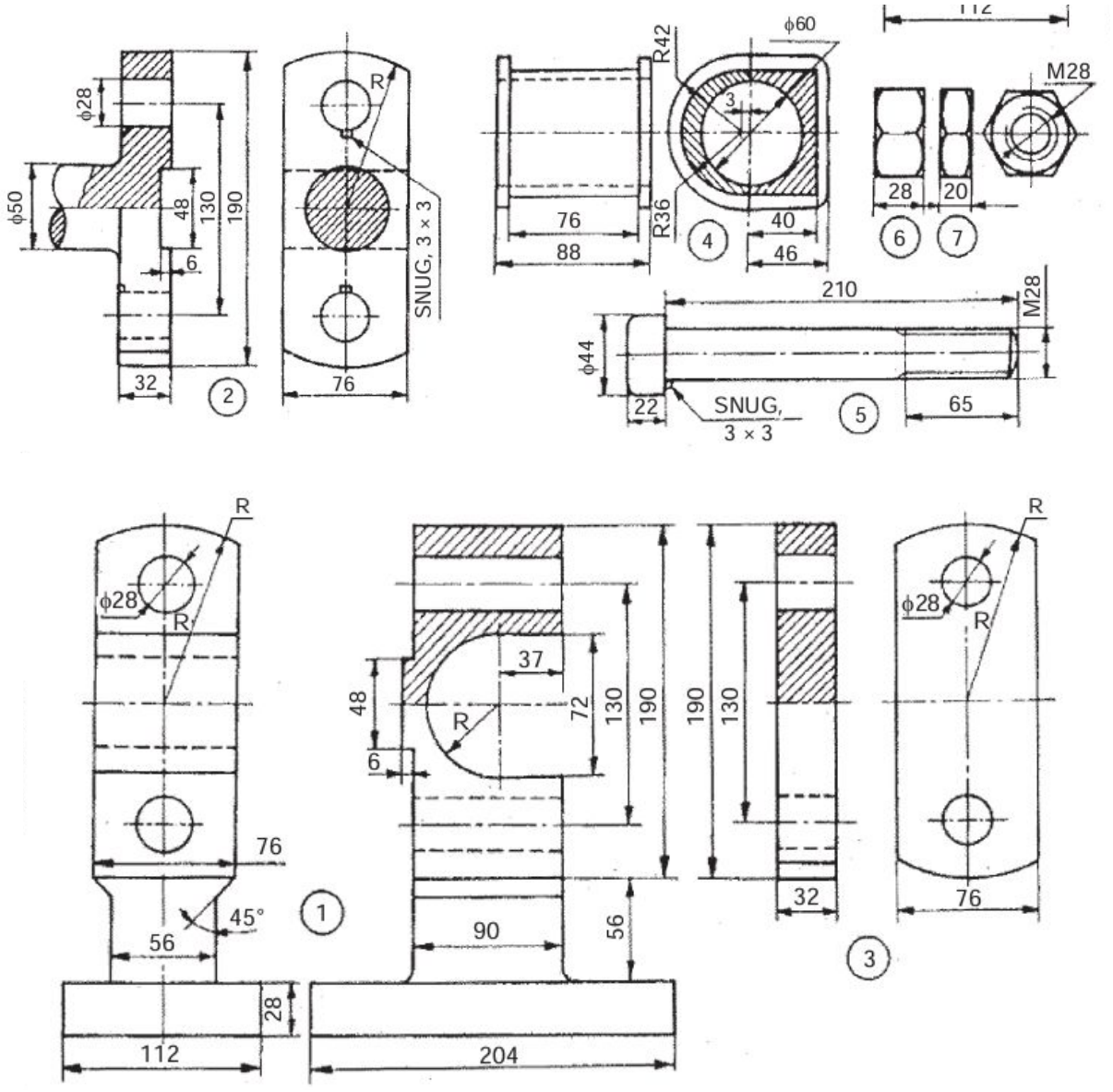

Parts list

Sl. No.	Name	Matl	Qty
1	Body	CI	1
2	Rod end	MS	1
3	Cover plate	MS	1
4	Brasses	Brass	1
5	Bolt	—	2
6	Nut	—	2
7	Lock nut	—	2

Procedure:

1. Model all the parts given in parts module & apply material as shown in the parts table.
2. Assembly the parts suitably using assembly module.
3. Draft the assembly, mark part numbers using balloons & take print of the same.
4. Note down the following values:
    a. Total mass of the assembly = _____
    b. Distance between center of gravity of each part from its lowermost point when it is placed vertically? _____

Precautions:

1. Do not save your files on desktop or C drive. (They will be automatically erased on system restart.)
2. Save your file in the D drive in a folder of your name or roll number.
3. Don't install, uninstall or change any setting the system.
4. Don't tamper or exchange any hardware (mouse/keyboard etc)
5. Inform about any malfunctions to the instructor right away.

Viva Questions:

1. What are the applications of Cross Head?
2. What type of fitting is used between the following pairs & why?
    a. Body & Brasses
    b. Bolt & Body
    c. Bolt & Rod End
    d. Bolt & Cover End
3. What is the total mass of the assembly after applying the materials mentioned in the Parts Table? _____
4. What is the height of center of gravity of each part from its lowermost point when it is placed vertically? _____

Assembly No 3: Eccentrics

Aim:

To model the Eccentrics assembly from given dimensions using available CAD package.

Apparatus:

Hardware: Desktop System with i3 processor, 8 GB RAM, Graphics Card & 250 GB HDD.
Software: Windows 7 64 bit OS, _____ Package.

Commands / Features used (in following modules):

Sketcher:
Part:
Assembly:
Drawing:

Question Diagram:

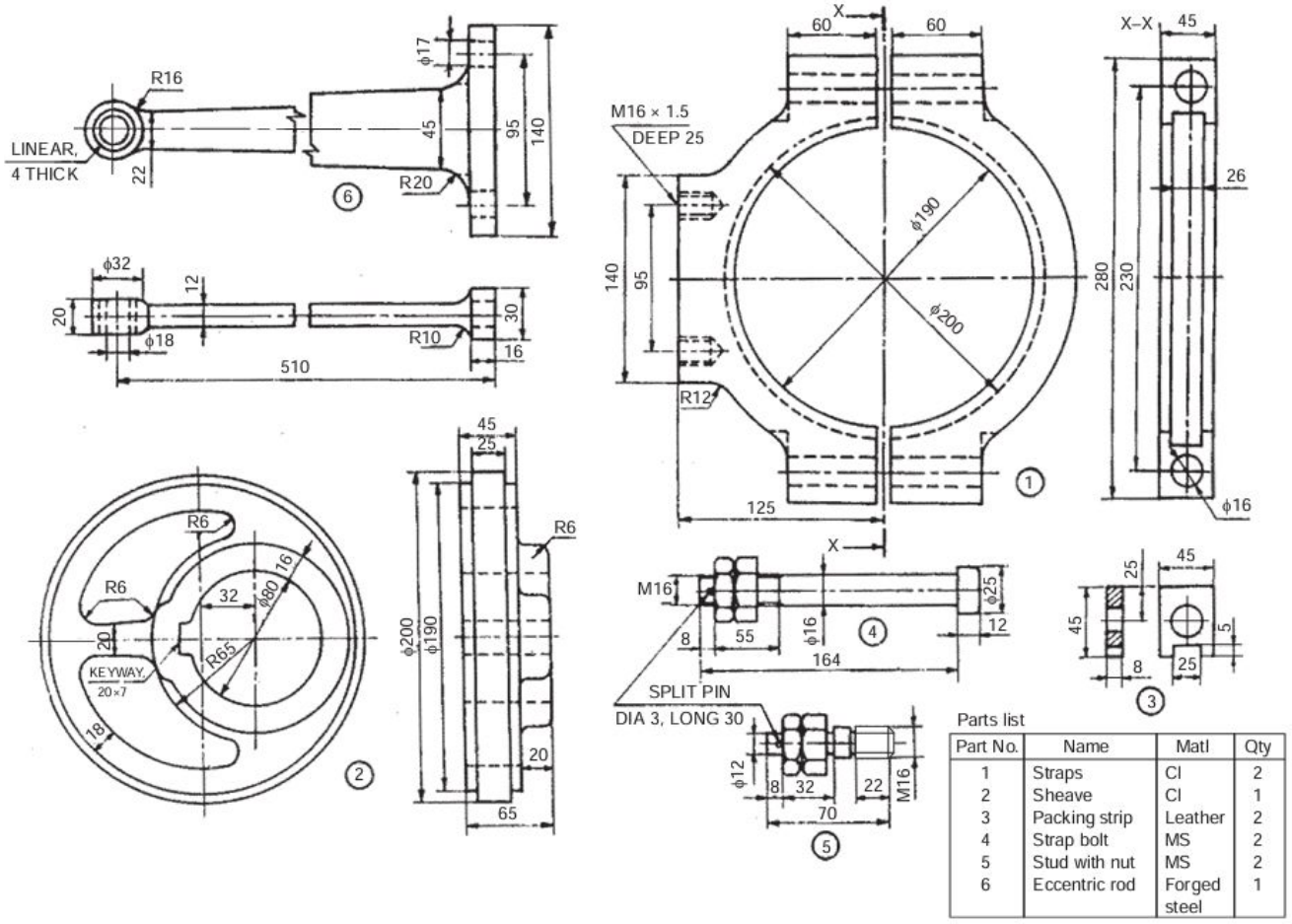

Parts list

Part No.	Name	Matl	Qty
1	Straps	CI	2
2	Sheave	CI	1
3	Packing strip	Leather	2
4	Strap bolt	MS	2
5	Stud with nut	MS	2
6	Eccentric rod	Forged steel	1

Fig. 18.8b Details of an eccentric

Procedure:

1. Model all the parts given in parts module & apply material as shown in the parts table.
2. Assembly the parts suitably using assembly module.
3. Draft the assembly, mark part numbers using balloons & take print of the same.
4. Note down the following values:
    a. Total mass of the assembly = _____

b. Distance between center of gravity of each part from its lowermost point when it is placed vertically? _____

Precautions:

1. Do not save your files on desktop or C drive. (They will be automatically erased on system restart.)
2. Save your file in the D drive in a folder of your name or roll number.
3. Don't install, uninstall or change any setting the system.
4. Don't tamper or exchange any hardware (mouse/keyboard etc)
5. Inform about any malfunctions to the instructor right away.

Viva Questions:

1. What are the applications of Eccentrics?
2. What type of fitting is used between the following pairs & why?
   a. Straps & sheave
   b. Straps & strap bolt
   c. Eccentric rod & the ring in it.
3. What is the total mass of the assembly after applying the materials mentioned in the Parts Table? _____
4. What is the height of center of gravity of each part from its lowermost point when it is placed vertically? _____

Assembly No 4: Lathe Tool Post

Aim:

To model the assembly of Lathe tool post from given dimensions using available CAD package.

Apparatus:

Hardware: Desktop System with i3 processor, 8 GB RAM, Graphics Card & 250 GB HDD.
Software: Windows 7 64 bit OS, _____ Package.

Commands / Features used (in following modules):

Sketcher:
Part:
Assembly:
Drawing:

Question Diagram:

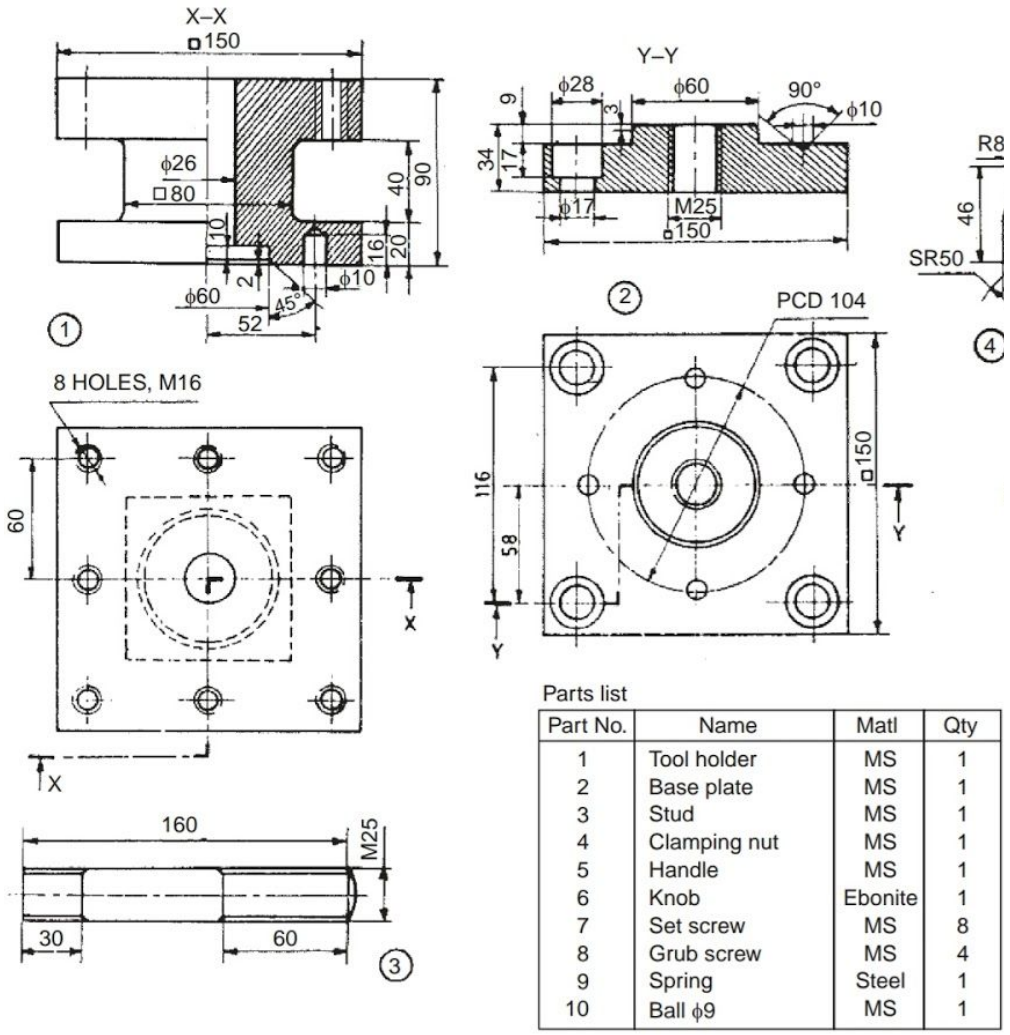

Parts list

Part No.	Name	Matl	Qty
1	Tool holder	MS	1
2	Base plate	MS	1
3	Stud	MS	1
4	Clamping nut	MS	1
5	Handle	MS	1
6	Knob	Ebonite	1
7	Set screw	MS	8
8	Grub screw	MS	4
9	Spring	Steel	1
10	Ball ϕ9	MS	1

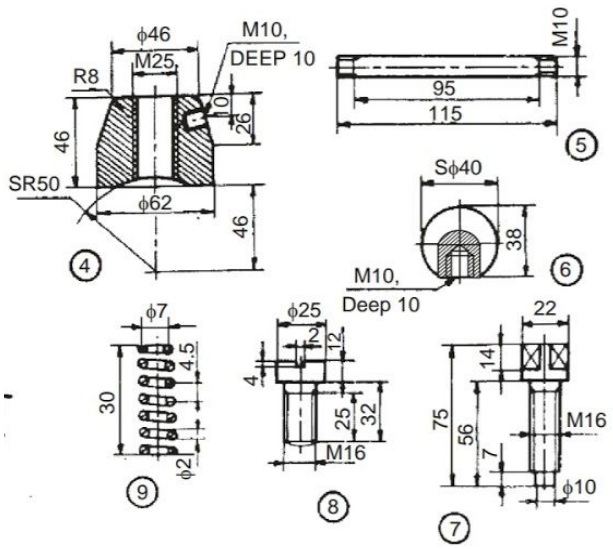

Procedure:

1. Model all the parts given in parts module & apply material as shown in the parts table.
2. Assembly the parts suitably using assembly module.
3. Draft the assembly, mark part numbers using balloons & take print of the same.
4. Note down the following values:
    a. Total mass of the assembly = _____
    b. Distance between center of gravity of each part from its lowermost point when it is placed vertically? _____

Precautions:

1. Do not save your files on desktop or C drive. (They will be automatically erased on system restart.)
2. Save your file in the D drive in a folder of your name or roll number.
3. Don't install, uninstall or change any setting the system.
4. Don't tamper or exchange any hardware (mouse/keyboard etc)
5. Inform about any malfunctions to the instructor right away.

Viva Questions:

1. What are the applications of Eccentrics?
2. What type of fitting is used between the following pairs & why?
    a. Tool holder & base plate
3. What is the total mass of the assembly after applying the materials mentioned in the Parts Table? _____
4. What is the height of center of gravity of each part from its lowermost point when it is placed vertically? _____

Assembly No 5: Plummer Block

Aim:

To model the Plummer block assembly from given dimensions using available CAD package.

Apparatus:

Hardware: Desktop System with i3 processor, 8 GB RAM, Graphics Card & 250 GB HDD.
Software: Windows 7 64 bit OS, _____ Package.

Commands / Features used (in following modules):

Sketcher:
Part:
Assembly:
Drawing:

Question Diagram:

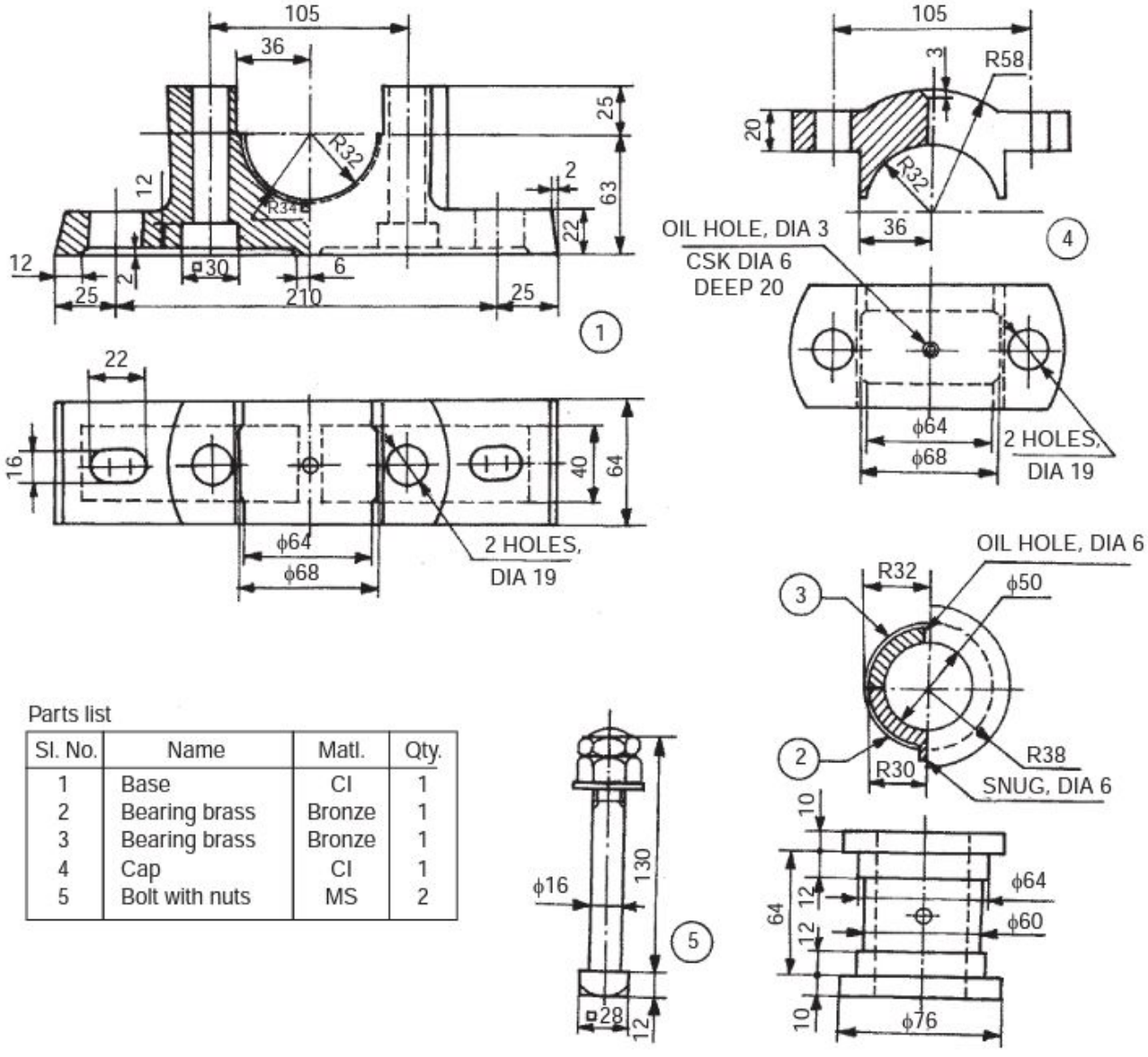

Parts list

Sl. No.	Name	Matl.	Qty.
1	Base	CI	1
2	Bearing brass	Bronze	1
3	Bearing brass	Bronze	1
4	Cap	CI	1
5	Bolt with nuts	MS	2

Procedure:

1. Model all the parts given in parts module & apply material as shown in the parts table.

2. Assembly the parts suitably using assembly module.
3. Draft the assembly, mark part numbers using balloons & take print of the same.
4. Note down the following values:
    a. Total mass of the assembly = _____
    b. Distance between center of gravity of each part from its lowermost point when it is placed vertically? _____

Precautions:

1. Do not save your files on desktop or C drive. (They will be automatically erased on system restart.)
2. Save your file in the D drive in a folder of your name or roll number.
3. Don't install, uninstall or change any setting the system.
4. Don't tamper or exchange any hardware (mouse/keyboard etc)
5. Inform about any malfunctions to the instructor right away.

Viva Questions:

1. What are the applications of Eccentrics?
2. What type of fitting is used between the following pairs & why?
    a. Base bearing brass
    b. Bearing brass & shaft
    c. Base & cap
3. What is the total mass of the assembly after applying the materials mentioned in the Parts Table? _____
4. What is the height of center of gravity of each part from its lowermost point when it is placed vertically? _____

Assembly No 6: Screw Jack

Aim:

To model the screw Jack assembly from given dimensions using available CAD package.

Apparatus:

Hardware: Desktop System with i3 processor, 8 GB RAM, Graphics Card & 250 GB HDD.
Software: Windows 7 64 bit OS, _____ Package.

Commands / Features used (in following modules):

Sketcher:
Part:
Assembly:
Drawing:

Question Diagram:

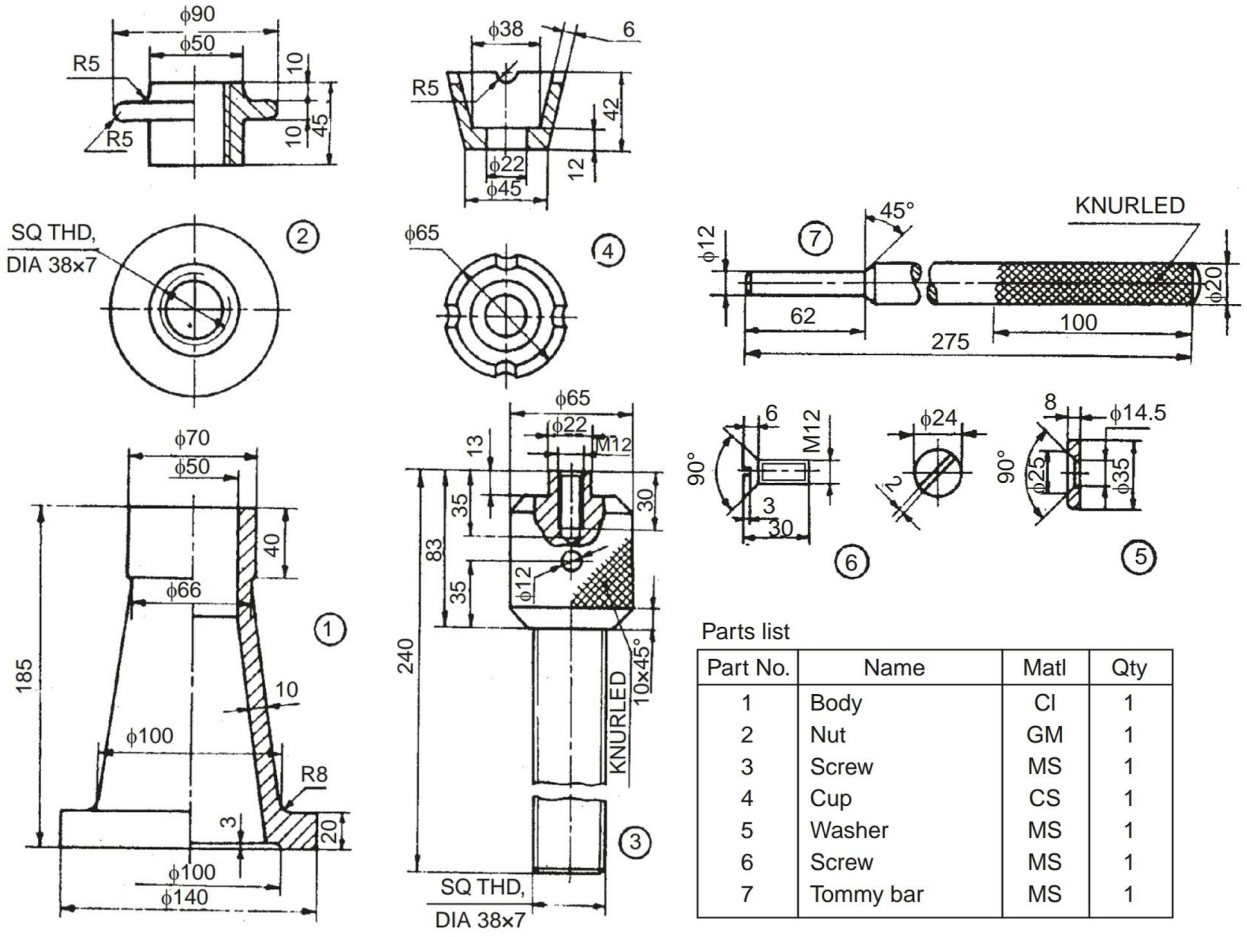

Parts list

Part No.	Name	Matl	Qty
1	Body	CI	1
2	Nut	GM	1
3	Screw	MS	1
4	Cup	CS	1
5	Washer	MS	1
6	Screw	MS	1
7	Tommy bar	MS	1

Procedure:

1. Model all the parts given in parts module & apply material as shown in the parts table.
2. Assembly the parts suitably using assembly module.
3. Draft the assembly, mark part numbers using balloons & take print of the same.
4. Note down the following values:
    a. Total mass of the assembly = _____
    b. Distance between center of gravity of each part from its lowermost point when it is placed vertically? _____

Precautions:

1. Do not save your files on desktop or C drive. (They will be automatically erased on system restart.)
2. Save your file in the D drive in a folder of your name or roll number.
3. Don't install, uninstall or change any setting the system.
4. Don't tamper or exchange any hardware (mouse/keyboard etc)
5. Inform about any malfunctions to the instructor right away.

Viva Questions:

1. What are the applications of Eccentrics?
2. What type of fitting is used between the following pairs & why?
    a. Body & Nut
    b. Nut & screw
    c. Cup & Screw
    d. Tommy Bar & Screw
3. What is the total mass of the assembly after applying the materials mentioned in the Parts Table? _____
4. What is the height of center of gravity of each part from its lowermost point when it is placed vertically? _____

Assembly No 7: Connecting Rod

Aim:

To model the Connecting Rod assembly from given dimensions using available CAD package.

Apparatus:

Hardware: Desktop System with i3 processor, 8 GB RAM, Graphics Card & 250 GB HDD.
Software: Windows 7 64 bit OS, _____ Package.

Commands / Features used (in following modules):

Sketcher:
Part:
Assembly:
Drawing:

Question Diagram:

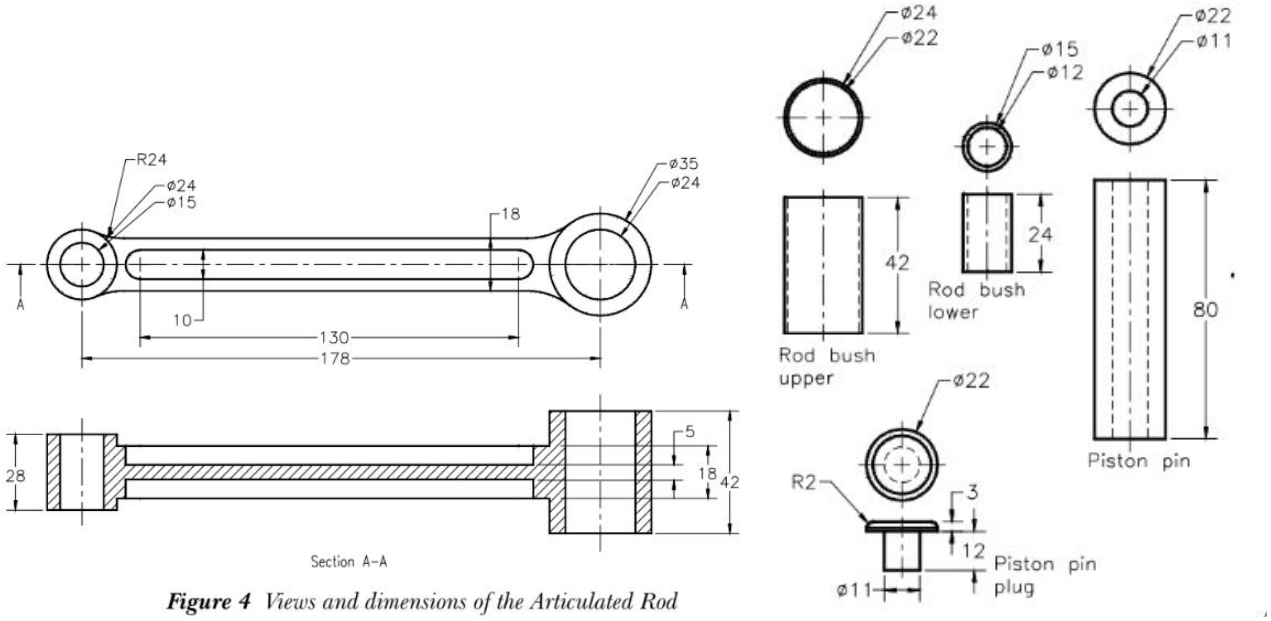

Figure 4 *Views and dimensions of the Articulated Rod*

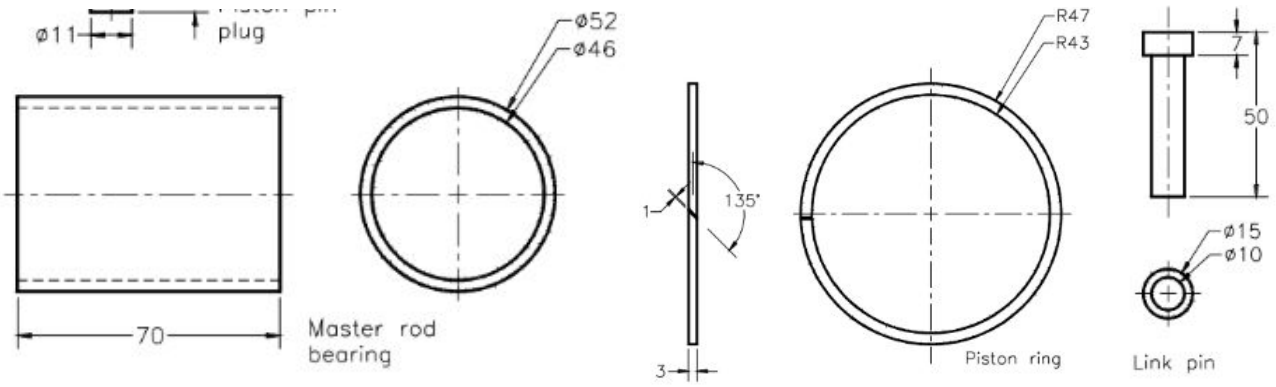

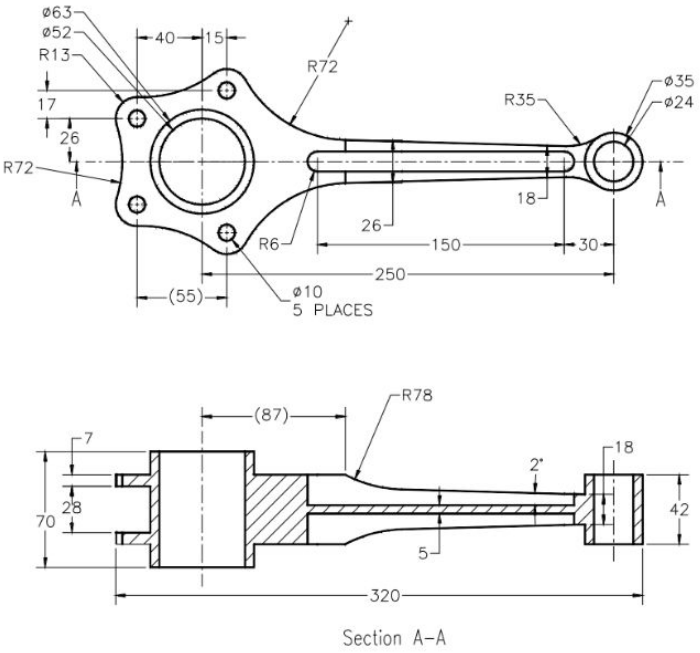

Figure 5 *Views and dimensions of the Master Rod*

Procedure:

1. Model all the parts given in parts module & apply material as shown in the parts table.
2. Assembly the parts suitably using assembly module.
3. Draft the assembly, mark part numbers using balloons & take print of the same.
4. Note down the following values:
    a. Total mass of the assembly = _____
    b. Distance between center of gravity of each part from its lowermost point when it is placed vertically? _____

Precautions:

1. Do not save your files on desktop or C drive. (They will be automatically erased on system restart.)
2. Save your file in the D drive in a folder of your name or roll number.
3. Don't install, uninstall or change any setting the system.
4. Don't tamper or exchange any hardware (mouse/keyboard etc)
5. Inform about any malfunctions to the instructor right away.

Viva Questions:

1. What are the applications of Eccentrics?
2. What is the total mass of the assembly after applying the materials mentioned in the Parts Table? _____
3. What is the height of center of gravity of each part from its lowermost point when it is placed vertically? _____

Assembly No 8: Rotating Center

Aim:

To model the Rotating Center assembly from given dimensions using available CAD package.

Apparatus:

Hardware: Desktop System with i3 processor, 8 GB RAM, Graphics Card & 250 GB HDD.
Software: Windows 7 64 bit OS, _____ Package.

Commands / Features used (in following modules):

Sketcher:
Part:
Assembly:
Drawing:

Question Diagram:

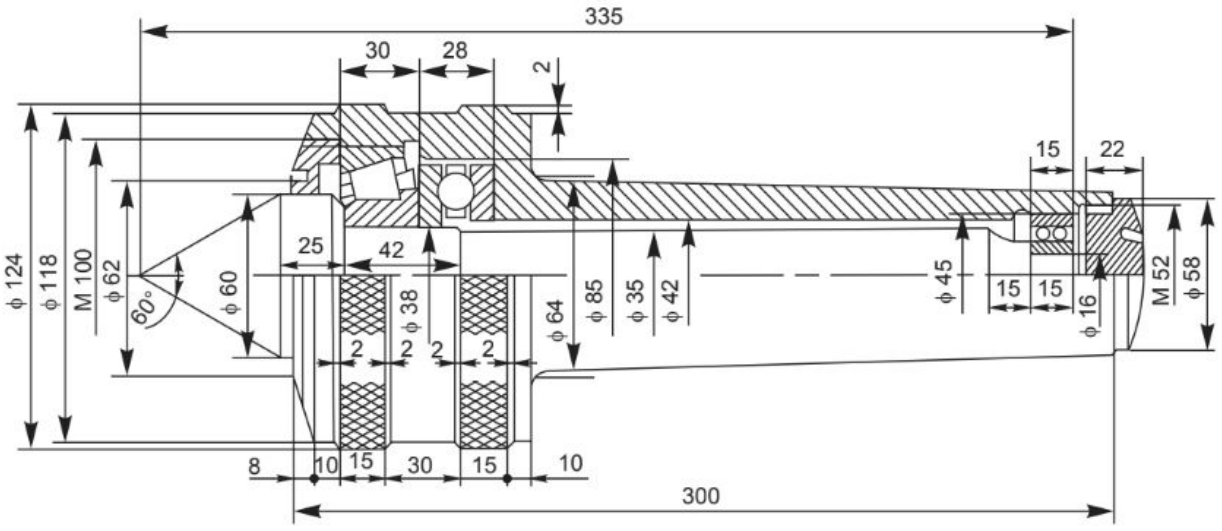

Fig. 12.17 Revolving center

Procedure:

1. Model all the parts given in parts module & apply material as shown in the parts table.
2. Assembly the parts suitably using assembly module.
3. Draft the assembly, mark part numbers using balloons & take print of the same.
4. Note down the following values:
    a. Total mass of the assembly = _____
    b. Distance between center of gravity of each part from its lowermost point when it is placed vertically? _____

Precautions:

1. Do not save your files on desktop or C drive. (They will be automatically erased on system restart.)
2. Save your file in the D drive in a folder of your name or roll number.
3. Don't install, uninstall or change any setting the system.
4. Don't tamper or exchange any hardware (mouse/keyboard etc)
5. Inform about any malfunctions to the instructor right away.

Viva Questions:

1. What are the applications of Eccentrics?
2. What is the total mass of the assembly after applying the materials mentioned in the Parts Table? _____
3. What is the height of center of gravity of each part from its lowermost point when it is placed vertically? _____