METHODIST

COLLEGE OF
ENGINEERING & TECHNOLOGY
OU

Estd : 2008

Yanthra

We keep the world in motion...

Annual Department Magazine

2019-20

Department of Mechanical Engineering

Methodist College of Engineering & Technology

King Koti Road, Abids, Hyderabad

CONTENTS

Message from Mr. K Krishna Rao, Secretary and Correspondent	3
Message from Dr. M. Lakshmipathi Rao, Director	4
Message from Dr Prabhu G Benakop, Principal	5
Head of the Department's Message	6
Department of Mechanical Engineering	7
Vision	7
Mission	7
PROGRAM OUTCOMES	7
Programme Educational Objectives (PEO's)	8
Programme Specific Outcomes (PSO's)	8
ME CAD CAM	9
PROGRAM OUTCOMES	9
PROGRAMME EDUCATIONAL OBJECTIVES (PEOS)	9
TECHNICAL ARTICLES	10
NANO STRUCTURE GRAPHENE	10
ACE YOUR NEXT HR INTERVIEW	12
Start New path to Your Career	15
The story of Adding Forces	17
The not so strange 'Life of i'	23
160717736067, Rajendra - V Sem	23
GURUJI: The beginning . . .	24
Pressure your Coal!	26

Message from Mr. K Krishna Rao, Secretary and Correspondent

It is quite exciting to know that the Department of Mechanical Engineering is bringing out its annual college magazine "Manthan". It has been my desire to provide state-of-the-art facilities to the college & was very busy in developing the infrastructure for the same. The pandemics shattered all our plans coming out of the blue. Amidst all this when I was informed that the magazine from the mechanical department is in its final stage and my message for the magazine is needed, I felt greatly delighted.

The reports, the articles, the poems, and other contents of Yantra, shown to me in its draft stage, are decent. Efforts of contributors (students and staff) and the magazine team are indeed commendable. The editorial board members concerned with the publication of the magazine deserve to be complimented for their special efforts in this year's magazine.

Students would realize that the department has given them a lot of things and also a lot of opportunities. Besides academic activities as per University's curriculum, we provide you platforms for co curricular and extra-curricular activities, placement talks, sessions by members of our Council of Senior Scientists, and much more, The more of these opportunities you grab, the more will be the learning, satisfaction and above all, your prospective contribution to yourself and eventually

I am confident that the contents of "Yantra" will be appreciated by all. I convey my sincere good wishes to all who contributed, to those who will eventually get to read and also to all teachers and staff of the mechanical department.

Message from Dr. M. Lakshmipathi Rao, Director

It gives me great pleasure to bring out Yantra from the Mechanical Department of our college. Times have changed and the digital age is upon us and yet, the power of ink still remains unparalleled. I strongly believe that this magazine will serve as a reminder to all the generations to come, about the glorious feats that our Mechanical Engineering students have achieved in this era.

Having obtained laurels in the state and national levels in various competitions, the documentation of all those achievements in this magazine will serve as a source of inspiration for all the younger students who are studying here as well as those who are yet to join us in the coming years.

Considering the predicament that we are all in due to the pandemic, this is indeed a truly testing time for each and every one of us and one where we should stay strong and stand together. Let's take this as an opportunity to catch up with time and a way to improve ourselves into the best of us.

Education and the learning process do not have to be confined to the four walls of a classroom and my sincere advice to all my students is to seek knowledge from as many sources as you can to mould yourselves to become better human beings. We look forward to the coming academic year, with excitement, confidence, hope and utmost optimism. I am very much happy to see the innovative teaching methodologies being followed in the department owing to the youngsters who joined the institute recently. It baffles me to see that the elderly are also equally enthusiastic in welcoming the digital change.

I congratulate all faculties, students and staff for their hard work in publishing a magazine that will represent the insight of the Mechanical department.

Wishing them all the best of luck!

Message from Dr Prabhu G Benakop, Principal

I am proud to announce the release of Yantra magazine. The magazine signifies the writer's penmanship and also allows them to share their ideas . I acknowledge the efforts of students and staff of the Mechanical department who have taken the initiative to promote the writing and publishing skills of the students and faculty all alike. I am sure this will help the students to share and express their ideas in an articulate manner.

Students and staff achievements have also been presented which will be a motivational factor for the other students to achieve the standard of excellence. Glad to say that we have achieved our aim of turning this into reality. I would like to congratulate all the students, teachers, alumni and everyone involved in bringing out this edition even in the times of the pandemic situation we are all in right now.

The pandemics created a situation of hastily turning to digital methodologies of teaching, learning & conducting meetings on the internet. While this had its own set of problems, it did have its advantages. I am happy to see the way the mechanical department has faced the situation & come out with flying colours. Their innovative ideas of using virtual CAD models in the teaching field is quite unheard of. Also, the attendance analysis system generated by them is helping us identify & mentor the students in a proper way.

I wish everyone loads of success and a bright future.

Head of the Department's Message

I am quite delighted to learn about the forthcoming issue Yantra. The magazine will provide a platform for students and faculty members to express their knowledge and skills in both technical & creative fields. It will also develop the experience of the students by utilising their management skills. I do appreciate and applaud the editorial team for their successful completion of this tedious yet daunting task of compiling the thoughts and ideas of our students and faculty into a meaningful and delightful visual edition of Yantra.

Nurturing creativity and inspiring innovation are two of the critical elements of successful education, and a department magazine is the perfect combination of both. It harnesses the creative energies of the academic community and condenses the spirit of their inspired imagination in the most brilliant way possible.

At present, we are living through an unprecedented global situation with the COVID-19 crisis creating real uncertainty for all of us. As we move through this challenging time, I wish you and your loved ones good health and safety. As you work to fulfil your commitment to the college and society, I'd like to remind you to practice self-care.

More than ever, our society needs a generation that excels both in academic and humane skills. Besides improving your intellectual ability, the fragrance of knowledge should inculcate a sense of empathy and compassion in you. It enables you to contest and dispute against social injustices. It provides a voice to the voiceless. I congratulate the team of students and the faculty for their dedicated and tireless effort in bringing out this magazine. I wish all a delightful reading experience.´

Although the pandemics shook us all up, I am happy to see that the editorial team still came up with a perfect magazine right from the magazine cover to all the articles & posters presented in this edition.
I take this opportunity to express my sincere thanks to all the members of the faculty and auxiliary staff for their sincere contribution in making this Edition.

Department of Mechanical Engineering

Vision

To be a reputed centre of excellence in the field of mechanical engineering by synergizing innovative technologies and research for the progress of society.

Mission

1. M1: To impart quality education by means of state-of-the-art infrastructure.
2. M2: To involve in training and activities on leadership qualities and social responsibilities.
3. M3: To inculcate the habit of life-long learning, practice professional ethics and serve the society.
4. M4: To establish industry- institute interaction for stakeholder development

PROGRAM OUTCOMES

PO1. Engineering knowledge: Apply the basic knowledge of mathematics, science and engineering fundamentals along with the specialized knowledge of mechanical engineering to understand complex engineering problems.

PO2. Problem analysis: Identify, formulate, design and analyze complex mechanical engineering problems using knowledge of science and engineering.

PO3. Design/development of solutions: Develop solutions for complex engineering problems, design and develop system components or processes that meet the specified needs with appropriate consideration of the public health and safety, and the cultural, societal, and environmental considerations.

PO4. Conduct investigations of complex problems: Formulate engineering problems, conduct investigations and solve using research-based knowledge.

PO5. Modern tool usage: Use the modern engineering skills, techniques and tools that include IT tools necessary for mechanical engineering practice.

PO6. The engineer and society: Apply the contextual knowledge to assess societal, health, safety, legal and cultural issues and the consequent responsibilities relevant to the professional engineering practice.

PO7. Environment and sustainability: Understand the impact of the professional engineering solutions in societal and environmental contexts, and demonstrate the knowledge of, and need for sustainable development.

PO8. Ethics: Apply ethical principles and commit to professional ethics and responsibilities during professional practice.

PO9. Individual and team work: Function effectively as an individual, and as a member or leader in diverse teams, and in multidisciplinary settings.

PO10. Communication: Communicate effectively on complex engineering activities to various groups, ability to write effective reports and make effective presentations.

PO11. Project management and finance: Demonstrate and apply the knowledge to understand the management principles and financial aspects in multidisciplinary environments.

PO12. Life-long learning: Recognize the need for, and have the preparation and ability to engage in Independent and life-long learning in the broadest context of technological change.

Programme Educational Objectives (PEO's)

The Graduates of the programme shall be able to:

PEO1: Excel as engineers with technical skills, and work with complex engineering systems

PEO2: Capable to be entrepreneurs, work on global issues, and contribute to industry and society through service activities and/or professional organizations.

PEO3: Lead and engage diverse teams with effective communication and managerial skills

PEO4: Develop commitment to pursue life-long learning in the chosen profession and/or progress towards an advanced degree

Programme Specific Outcomes (PSO's)

PSO1: Apply the knowledge of CAD/CAM/CAE tools to analyze, design and develop the products and processes related to Mechanical Engineering.

PSO 2: Solve problems related to mechanical systems by applying the principles of modern manufacturing technologies.

PSO 3: Exhibit the knowledge and skill relevant to HVAC and IC Engines.

ME CAD CAM

PROGRAM OUTCOMES

PO 1: Demonstrate and apply the knowledge of CAD/CAM Simulation tools and techniques to address problems related to mechanical engineering.

PO 2: Independently carry out research /investigation and development work to solve practical problems

PO 3: Use research-based knowledge and research methods including design of experiments, analysis and interpretation of data, and synthesis of the information to provide valid conclusions.

PO 4: Write and present a substantial technical report/document.

PROGRAMME EDUCATIONAL OBJECTIVES (PEOS)

PEO 1: Become a source of innovative solutions to complex problems related to computer aided design, simulation & manufacturing, and pursue a successful career in the field of Mechanical Engineering.

PEO 2: Apply modern computational, analytical, simulation tools and techniques to address the technical challenges in manufacturing industries.

PEO 3: Work individually and also in teams; gain trust and respect of others as an effective and ethical team member.

PEO 4: Development in the chosen profession by continuously updating the knowledge and progress towards an advanced degree.

ONE DAY WORKSHOP

ON

"RECENT ADVANCES IN WELDING(RAW-2019)"

on

22 August 2019

ORGANIZED BY:

DEPARTMENT OF MECHANICAL ENGINEERING
METHODIST COLLEGE OF ENGINEERING & TECHNOLOGY
ABIDS, HYDERABAD
&

INDIAN WELDING SOCIETY

Hyderabad Centre


Major contributions of DMRL


Inauguration
Student Forum of
INDIAN WELDING SOCIETY - HYDERABAD


ONE DAY WORKSHOP
ON
"RECENT ADVANCES IN WELDING (RAW-2019)"
on 22 August 2019
Organized By :
Department of Mechanical Engineering
Methodist College of Engineering & Technology
Abids, Hyderabad.
&
INDIAN WELDING SOCIETY
Hyderabad Centre

TECHNICAL ARTICLES

Article Submission
Name: BUDIDA VYSHNAVI
Roll No: 160717736337
Class / Sem: III Year

NANO STRUCTURE GRAPHENE

Introduction

A graphene is a form of carbon consisting of planar films that are in one atom. It is an atomic-scale hexagonal lattice made of carbon atoms & it is an allotrope of carbon consisting of a single layer of atoms arranged in a two-dimensional honeycomb lattice. Graphene has great potential to be used for low-cost, flexible, and high efficiency.

Photovoltaic devices due to their excellent electron-transport properties and extremely high carrier mobility. Recently, several graphene-based solar cells have been reported, in which graphene serves as different parts of the cell. Non-covalent and covalent modifications are the main functionalization methods for graphene. Non-covalent modification employs the weak interactions, such as pi pi stacking and van der Waals forces, between graphene and modifiers.

What is graphene?

Graphene is a material that has been touted for many applications, both low-tech and high-tech While it may take some time to make it into many electronic devices as a conductive medium/printable circuitry, it has started to gain a lot of attention and commercial viability in the small-scale energy storage systems, such as batteries and capacitors, which are used in many electronics.

Graphene is a one-atom-thick sheet of carbon atoms arranged in an exceedingly honeycomb-like pattern. Graphene is the world's thinnest, strongest, and most conductive material-to both electricity and warmth. All these properties are exciting in research and businesses across the globe as graphene has the potential to revolutionize entire industries.

Dozens of researchers have demonstrated that adding even a trade amount of graphene to plastics, metals or other materials can make these materials much stronger - or lighter (as you can use less amount of material to achieve the same strength). Such graphene-enhanced composite materials can find uses in aerospace, building materials, mobile devices, and many other applications. Graphene has a lot of other promising applications: anti-corrosion coatings and paints, efficient and precise sensors, faster and efficient electronics, flexible displays, efficient solar panels, faster DNA sequencing, drug delivery, and more.

- Thermal applications of graphene
- New graphene-based material to increase.
- The recording density of data storage devices.
- Grapnel's graphene-based electronic patch may improve chronic wound monitoring.
- Transparent graphene photodetectors enable the advanced 3D camera.

Graphene Technology showcases the latest graphene research and development on practical commercial applications and Technologies. Graphene Technology is the premier source of breaking

information on commercial and practical applications of graphene and graphene-related materials. Graphene has received considerable attention for biosensing applications due to its unique physicochemical properties primarily its high surface-to-volume ratio, excellent thermal and electrical conductivity, biocompatibility, and strong electrochemical ability. The recent developments in the field of electrochemical biosensors using graphene nanomaterial includes graphene oxide, reduced graphene oxide, CVD graphene, and various graphene-based nanostructures like nanomesh, nanowalls, etc. Assessing in vivo toxicity of graphene materials. Current methods and outlook Emerging advances in Cancer nano theranostic with graphene nanocomposites opportunities and challenges.

Graphene nanoparticles and their applications in biomedicine Synthesis of Graphene refer to any process for fabricating Graphene. Mechanical exfoliation is the technique to realize single and few-layered Graphene produces from natural graphite by repeated peeling/exfoliation. Chemical vapour deposition has techniques for creating thin continuous films with thickness control in micro-electrons. Plasma enhanced chemical vapour deposition synthesizing large area Graphene on copper foils using spin-coated PMMA films. Graphene heterostructures are synthesizing. on cobalt substrates.

3D printing insinuates a methodology where a 3D printer is used for stacking.
layers of material under pc controls, following a 3D show or another electronic data source, realizing 3D inquiry. Various applications for 3D printing join layout discernment and prototyping, metal tossing, building, preparing, social protection, energy, and that is just a hint of something larger. As 3D printing development continues progressing and making, authorities gather possible biotechnological uses like bio-printing and PC helped tissue planning and retail amassing of especially completed outcomes which may change the substance of exchange.

Mechanical properties of graphene were upon freestanding graphene membranes prepared either by mechanical exfoliation of graphite or by CVD methods and deposited onto a specific substrate. This way the mechanical properties of the material could be obtained by the utilization of various techniques, such as Raman spectroscopy or atomic force microscopy.

Materials Science and Engineering is an acclaimed scientific discipline, expanding in recent decades to surround. polymers, ceramics, glass, composite materials, and biomaterials. Materials science and engineering involve the discovery and design of new materials. Many of the most pressing scientific problems humans currently face are due to the limitations of the materials that are available and, as a result, breakthroughs in materials science are likely to affect the future of technology significantly. Materials scientists lay stress on understanding how the history of a material influences its structure, and thus its properties and performance. All engineered products from aeroplanes to musical instruments, alternative energy sources related to ecologically-friendly manufacturing. processes, medical devices to artificial tissues, computer chips to data storage devices, and many more are made from materials.

CONCLUSION:
Graphene is the most wonderful atom in the universe. It is an easily available material anywhere. Easy and simple to produce graphene. It reduces the bulky components and complex structures, while using this material can be used everywhere in physical appliances like coating, solar, electrical, electronic, architecture, etc..., it is more composed of thousands of identical layers stacked on top of each other the more layers stacked on top of each other so the more layers we leave on paper the darker the colour is we call one of these layers graphene and its length is billions of meters so would something so deceptively simple and small has generated so much interest in the scientific community in the last decade and has frankly the potential to change our world. Graphene looks like a simple sheet of carbon atoms organized in hexagonal lattice code together start strongly by covalent

bonds and it has exceptional intrinsic mechanical properties so we can bend is twisted it will retain its original shape and size it is the strongest material ever discovered and has truly the potential to reinforce a lot of composite materials. Global warming with very keen interest the way we were brought up this material will completely change the feature generation to reduce the emission of harmful gases releasing into the atmosphere and reduce global warming and many more in the feature.

Article : Career Guidance.
Name: Akshay Bharadwaj
Roll No: 160717736320
Class / Sem: III Sem

ACE YOUR NEXT HR INTERVIEW

We as an individual at any point of time will face a situation where we need to attend an interview. The interview might be with a small company or a big multinational company, but the way they are looking for candidates has remapped to hire people only based on their potential.

Generally, your Hiring manager (your direct supervisor) will have a different set of approaches while conducting the interview which mainly focuses on Technical competencies and ask questions related to your skill, position, role, and responsibilities.

But the HR, on the other hand, will try to get a broader perspective by analyzing your Behavioral competencies and traits such as your personality, interests, values, and check if these competencies are coming in line with the organization's culture or not, by conducting a Behavioral event interview.

What is a Behavioral event interview?

Behavioural event interview (BEI) is a dynamic form of interview technique that is designed to uncover the actions (behaviours) behind an outcome or a duty. In particular, interviewers want to gain information about how the applicant has behaved in certain work/life situations. As they always believe that applicants' past behaviour often predicts how He/She will respond in similar future situations.

How BEI Matters for everyone?

In the interview, HR doesn't want to rely just on the candidate's word for analyzing their capability in the role. Hence as an applicant, you need to prove your worth by showcasing some evidence on how you handled the work-situations in the past, this gets them an understanding of your real potential.

Even If you're a graduate or a new entrant to the workforce, there's still a good chance that you will be asked behavioural questions; however, they will be limited in scope. Thus the Interviewers might ask for study- or life-related incidences.

For example, HR may want to know how well you function under deadlines within the team, so they may ask you about the last time you had to complete a group project.

FRAMEWORK TO TACKLE BEHAVIOURAL INTERVIEW

BEI Framework

1. ANALYZE THE JOB:

The very first step involves analyzing the job/role which you are applying for. This includes focusing on the areas about the duties and responsibilities of the job. It can be done by analyzing the job description, every job posting will have a job description that outlooks upon the various duties.

Skim the Job description and get an insight into the particular role you are applying for.

2. FIND BEHAVIOURAL ATTRIBUTES:

The second step is the core of the whole framework which involves writing down the behavioural attributes for the duties specified in step1.

To make it more practical, envision yourself in the job and think of the behaviours and traits you need to have to make that work successful and exceptional.

For example, the Behavioural attributes for the position of Design Engineer are as follows

- Teamwork/cooperation.
- Leadership/Initiative.
- Conflict management.
- Time management.

Tip Avoid writing long broad-ranging answers here.

3. PREPARE CONTEXT

Once you've listed what behaviours are needed in step 2. It is important to give context to the situation without context your answers will sound half empty. To prepare the right context the candidates are expected to shape their response in the STAR approach.

- Situation — Introduce the brief backstory of the situation to the interviewer. Try to be specific.
- Task — Explain the objective of what you are trying to achieve and what task have you taken
- Action — This is the longest part of the story as it involves explaining the steps you have taken to clear the roadblocks in the project. Give a detailed picture by highlighting your unique contributions.
- The result — Explain the results of the actions you have taken. I.e. whether you were successful in completing the task or not.

4. PORTRAY OUTCOMES

This is the final step which involves portraying your accomplishments and learnings from the situations you faced.

Outcomes and achievements are the most important aspects of your work as they create a valuable impression about yourself.

When explaining outcomes it is good to separate personal outcomes from organizational outcomes.

· Organizational outcomes

This includes the improvements that occurred in -your organization from your result of work. Always quantify your outcomes.

Example: Productivity rose by 5%.

Increased customer satisfaction rate by 12%.

· Personal outcomes

In their rush to talk about organizational outcomes candidates often neglect to talk about their outcomes. It is important to highlight your outcomes as they act as evidence of the learnings you have got from doing a particular job.

Example:
"One of the good things about working with the project team was that I discovered that I was highly effective working as part of a team. (skills-based and relating to teamwork)".

Your resume can get you through the main door but alone, it won't land you the job, the success of clearing the interview purely relied on how well you performed. One thing to note is that performing well at interviews is a learned process. The highly effective interviewees are not born with interview skills; rather they teach themselves what to say, how to say, and how to behave during an interview.

So, do your groundwork for the position which you are applying for and Ace your interview.

All the best for your next HR interview.

Content: Motivational Essay
Name: Sandeep Nune
Roll no: 160717736332
Class/sem: III Year
Title: Start New Path to Your Career.

Start New path to Your Career

We never get the opportunities we have to obtain those.

If you observed carefully this sentence has an ocean depth of meaning, factors and objectives.

Most of the people they may think while starting their graduation time earning the graduation certificate can solve every problem they will get a bucket of opportunities from top most companies.

But they realize at their academics last or when they attend for an interview that the communications are the biggest matter than earning graduation.

Communication: The process communicating with the opposite person using the different signs to deliver the proper content. Communicating means not only speaking with another person, there are different ways in communication.
EX: Poster presentation, Hand signs, Eye contact, etc.

According to the society upgrades, communication also developed. The types of communication now a day we are using

- Verbal
- Non Verbal
- Visual

There is much to know about the above types, we will discuss later about that. Now let see the importance of communication skills.

Why do communication skills matter?

Communication doesn't mean learning a new language. It's an art where you can deliver your proper content to the listeners what's in your mind.

Learning a new language, it's because of the client requirement. But now a day's English language has become the most connecting bridge to all the countries for any type of client.

Communication is the art of how effectively we are speaking and the structure of our way of conversation.

Why Graduation?

Graduation is the thing we can get an entry ticket to get into the market to prove our worth and also helps to learn specific specializations which we are engrossed in.

Actually the graduation with expertise communication can give us welcome at any type of industry to prove our worth.

Note: Read the sentence at the start of the article now you can get the information behind that sentence.

Remember, the organization never provides an opportunity for us; they just give us a chance to prove our skills and qualifications and how we are fit for their organization. Most of the people fail here because they are attending for different responsibilities which they don't know how to handle.

The above pyramid division indicates the opportunity level of an organization with qualifications.

Based on my research I will try to present graphically. Yearly the percentage of people who are obtaining opportunity based on their personality qualification.

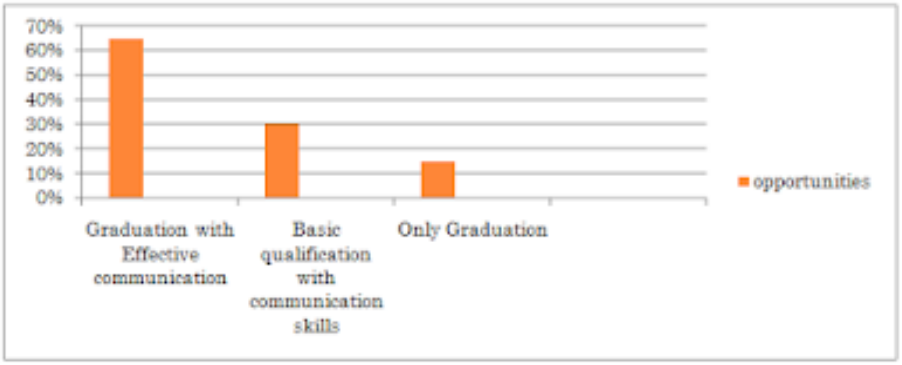

So finally you may have one question in your mind how to improve your communication.

There is no need to go to any institutes to learn communication, creating perfect circumstances helps us to improve our way of conversation.

Most common and effective tips to improve our communication skills

- Interact with yourself when you are alone
- Connect with professionals on any platform
- Reading Magazines and Books helps us more to find out the exact communication structure
- Always interact with your circle that is, who are best in communication.
- Give mini presentations during your college time.

I hope until here, you may get one understanding about how and why communication skills are important to our career.

All the best for your next learning adventure.

The story of Adding Forces

A long time ago…

An ailing father on his deathbed tells his four sons to bring him a bundle of sticks.

He then tells them to break the bundle as a whole. They fail.

He then tells them to take separate sticks & break them. Everyone succeeds.

Moral: Stay together or the world out there will break YOU. Simple & effective!
In this post, we'll apply the moral of this story to find simple ways to add forces in mechanics. Coming to the point,

When 2 forces are in the same direction they add up.

When they are in opposite directions, they get subtracted.

Simple & Easy. Isn't it?

In the story, if all the 4 sons had together tried to break the bundle, they'd have succeeded.

That gives us another moral to learn:

Moral: Together a team can solve any problem. No matter how big it is.
Being an engineer involves doing rather than talking. We must be able to apply our knowledge. A knowledge or moral that we can't apply is a waste for engineers.

But this can only be done when their direction is the same. What about the cases in which the direction differs?

We don't have to look far for that.

Assume 2 forces which are not in the same direction.

Now if we were to add them as 2 intact individual forces. Check out the following difficulties:

Parallelogram Law of Forces: If two forces are drawn starting from a common point in magnitude & direction, their resultant is given by the diagonal starting from the same point & passing through the opposite corner of the parallelogram formed from them.

OR

Triangle Law of Forces: If forces are drawn in magnitude & direction such that the tail of 2nd force starts @ the head of 1st, the line joining the tail of 1st force with the head of 2nd, gives the resultant (both in magnitude & direction).

There are 2 optional methods we can use to add the forces:

Analytical: Deriving & Remembering a complicated formula.
Geometric: Using geometric instruments to draw & measure with accuracy.
When the forces are more than 2, it becomes more complicated.

Polygon Law: If a set of forces are represented both in magnitude & direction as edges of a polygon drawn in order, their vector sum is represented by the closing edge of the polygon in reverse order.

Again there are the same 2 optional methods we can use.

But look how difficult it gets. Parallelogram or triangle law with analytical methods would mean we'd have to find the resultant of 2 forces at a time. Then add that resultant to the next & so on. Till all the forces are added.

Using geometric instruments would mean drawing the polygon with represented lines at the angles which ensure proper direction is maintained. Still, the accuracy would depend on the skills of one who draws the diagram.

Isn't there a simple method which involves remembering a simple formula & using a calculator to fast & reliable results?

It is! Just open the bundle as in the story. Divide & you can rule.

A force is already single. "How to break it?" you say. Well, I'd say it's more like a log which can be splintered.

Use trigonometry to split the forces into a horizontal & a vertical component each. Now all the components are either vertical or horizontal.

All the vertical components can be added to get a vertical component of resultant. Similarly, all the horizontal components can be added to get the horizontal component of resultant.

The resultant can of course be found using pythagoras theorem for magnitude & trigonometric tangent ratio for direction.

So, the Moral of Engg Mechanics is "Divide a complicated problem to make it simple."

That brings me to the conclusion:

- We must stay together in a team to be strong.
- We must join our strengths to counter big problems.
- We must divide problems into parts to make them simple.
- Now that's what I call rediscovering more meaning in the same old stories.

Content: Essay on Black Hole
Name: Mohammed Waheedulla Bilal
Roll no: 160718736039
Class/sem: 3rd/5th
Title: Unexplained Phenomenon.

The Black Hole, or simply a giant and a mysterious hole that sucks whatever comes under its path. The black Hole is a collapsed star with a massive amount of gravitational pull, say, in a technical point of view, when a star dies, it leaves behind its core in the outer space, and according to Einstein theory of relativity, if the mass of the core is 3x times the core of the sun, then it forms a Black Hole.

By its name, Black Hole is not actually a hole but a massive amount of matter packed in a small space. Let's take our sun, which has a gravitational pull 28x times more than earth i.e, if you weigh 50Kgs on earth you would be 1400Kgs on the sun!!!. Now Take 4 of those suns and squeeze them under a diameter of 24km, a short ride that you might take to our college. Imagine the Gravitational Pull inside it. The gravity inside a black hole is so strong that even light cannot escape from it.

How can you see a Black Hole? Well, you may identify one as you can see the gamma-ray burst that the hole emits. These were first recognized by Stephen Hawking and now carry his name, Hawking Radiation. Each Black hole has an event Horizon or a point of no return, where the gravitational pull is so strong that even Space and time swap their roles. If you happen to fall into one, you would be stretched and squeezed and be sucked into the gravitational singularity of the black hole

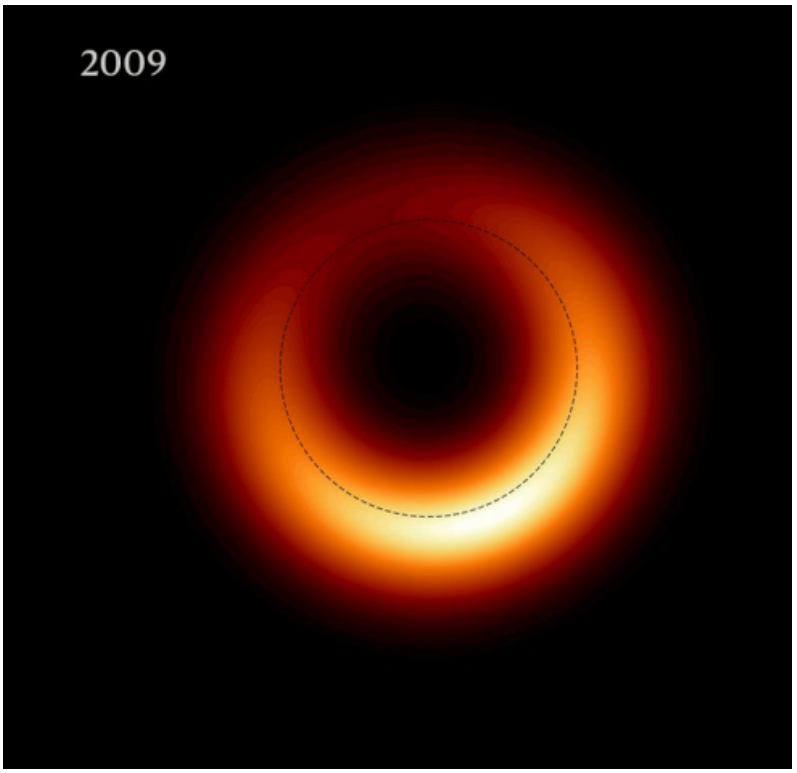

The Black Hole captured by the Hubble telescope
(The dotted circle is the event horizon)

But for the person looking at you from outside, you would be falling slowly getting dimmer and redder, in the end you would just freeze without crossing the event horizon. This is because time comes to a standstill near the black-hole. The gravitational pull of the black hole bends spacetime. Black Hole might be a path to a different universe. Stephen Hawking believed that Black Holes may prove to be an entry point to a parallel universe as the observable universe is massive and has its own history. The matter or, the information to be more precise is sucked into the black hole, needs to make an exit, either to a parallel universe or by the phenomenon of Black Hole Information Paradox, still remains a mystery. If you are wondering where to find a Black hole, don't be disappointed, we have one named Steller, which has a mass of 20 Sun's squeezed into a diameter of 15kms. They are 25,000 Light Years away from us, that means if we happened to travel at the speed of light, it would take us 25,000 years to reach there. The other is at the center of our own galaxy, with a mass of a million suns, but that's just too far to suck in any of our planets, it's about 140 Quadrillion Miles away from us. To sum up, with the

current technology, we could only assume the facts, but who knows, one day Humanity might become Interstellar Species, making a trip to other galaxies like an international vacation.

WE ARE NOT ALONE

CADiMate - 3D Models submitted by students

Name: JERRIPOTHULA PRABHU TEJA
ROLL NO - 160718736306
class/sem :

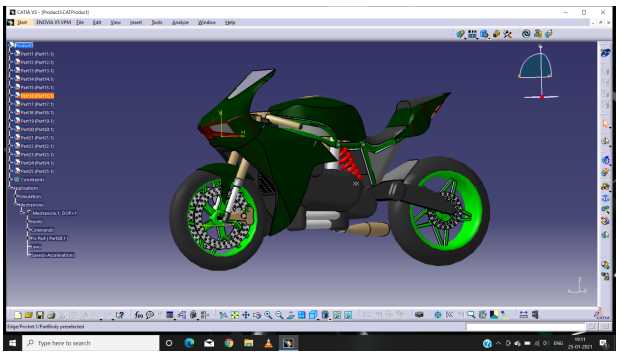

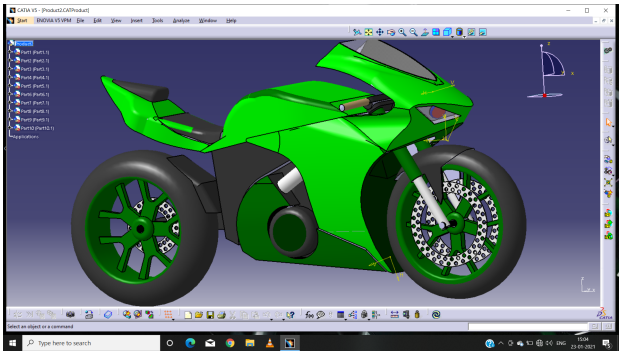

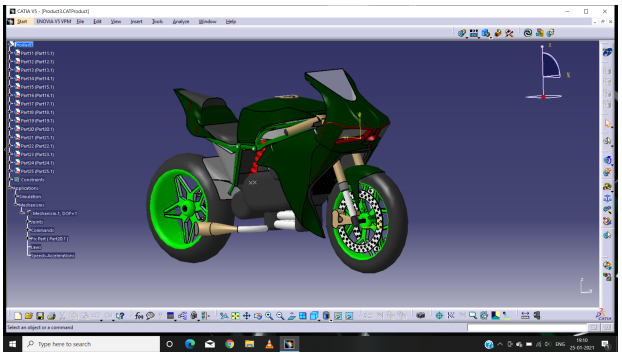

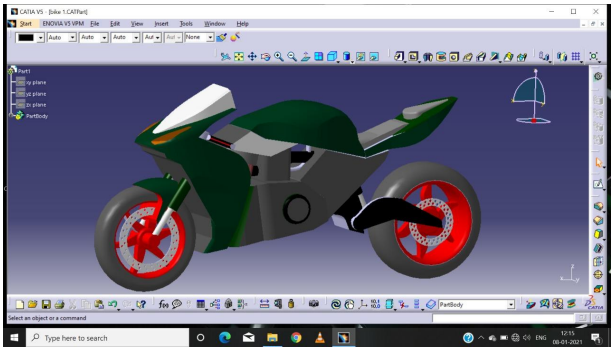

Ganesh Yandra (16071773632)
III Year Student

I have been sketching artworks for a long time. I just use pencil shading to draw life sized sketches of real people. It started out as a hobby but on suggestion from one of my friends, I started doing it on commission basis as well.

After publishing my sketches in last year's magazine some people were skeptical about my abilities. So here I have included the scans of my work at different stages of development. I am also working on a time lapse video of a new sketch. Will share it on my instagram when its ready.

Instagram handle: @ganeshyandra_arts

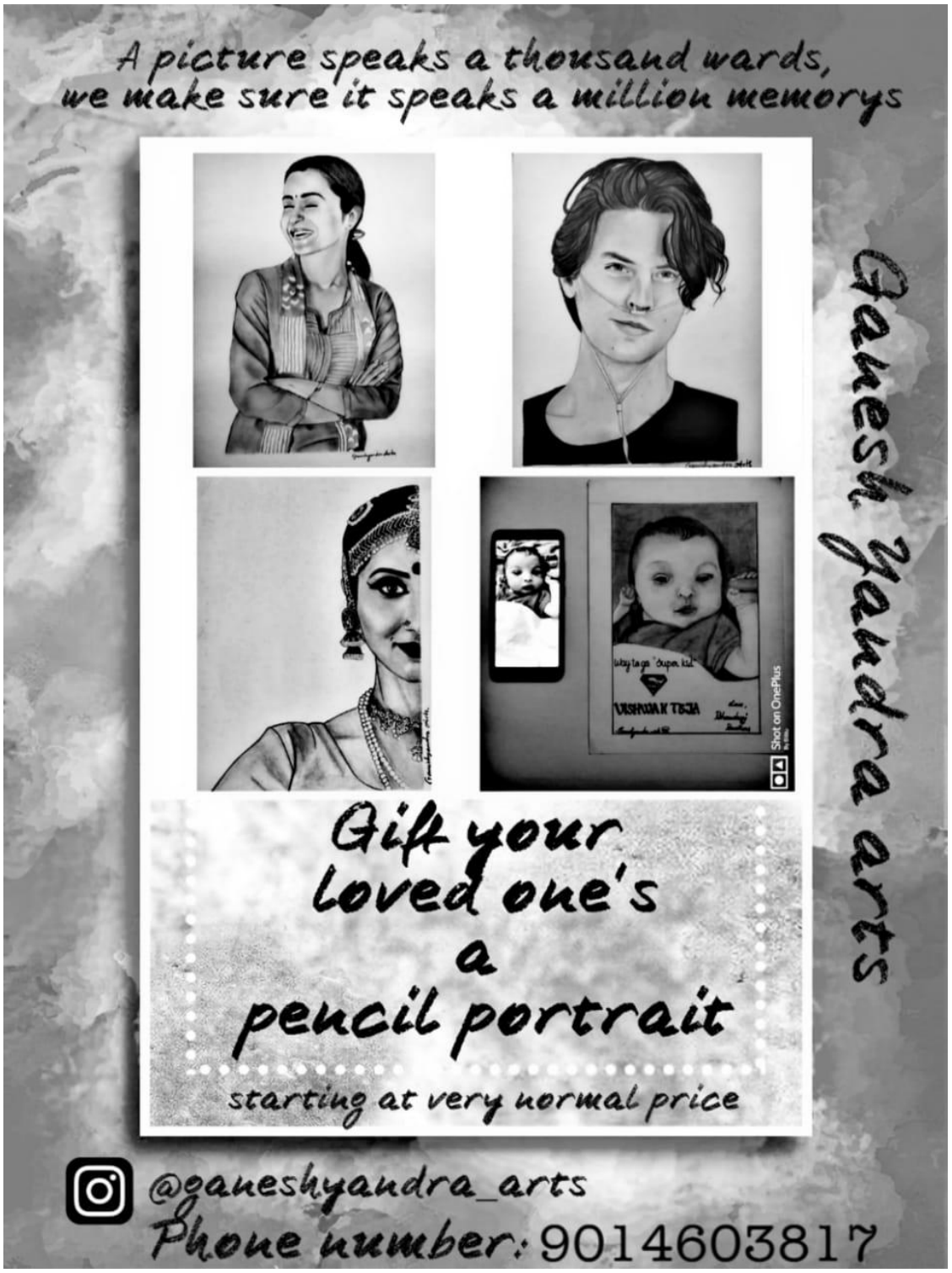

"One of the biggest powers the world has today is that of the youth". The world is facing the problem of the corona pandemics. The only solution to which seems oddly, to stay at home & stay isolated as much as possible. Our students came up with a unique way to give the world this message.

As it can be seen in the poster below, each student is carrying one letter from the message "STAY HOME, STAY SAFE". When each person takes care of her/his part in the society, the society on the whole gets better. This is the thought which the poster conveys between the words.

METHODIST
COLLEGE OF
ENGINEERING & TECHNOLOGY

Mechanical, 3rd Year students

The not so strange 'Life of i'

160717736067, Rajendra - V Sem

You must have guessed that the title is influenced by the novel / movie "Life of Pi". But I am not going to talk on the spiritual concept of I, Me & Myself, (even though it does have a spiritual part in it). I am going to talk about 'i' - the building block of imaginary or virtual number system.
'i' is defined as the imaginary number that equals the square root of negative one. It is considered by many as unnatural & non existent. A complete branch of mathematics is dedicated to it & many engineering subjects actually use this concept to successfully represent some physical experiments.

It has been one of those concepts that has always amazed me with its possible applications. I think people are limited by their conception which is heavily dependant on science. And science only deals with the material aspects of our universe.

I received most of my valuable education in the spiritual environment of Manik Nagar, Humnabad, a town in northern Karnataka. I was encouraged to express my original thoughts and clear doubts over merely scoring more in exams.

I feel that the logic of i doesn't exist in the Material World but does in the spiritual one. None of us have seen God but we believe. None of us believe in ghosts but the stories exist & many people believe in that too.

We think there is no logical reasoning for the use of i. I feel that's because we are limiting ourselves to the confines of the real world. The logic of i will logically be just as special as the number itself. Let me start with an example:

Consider 2+i . If we only consider the real part of 2 then we'll expect it's square to be 4. But the imaginary part i makes the square (2+i)^2 = 3+4i. The real part being 3 instead of the expected 4.

'i' for me is the spiritual part of life. The part that affects our decisions in life and has much greater impact on what we end up doing. In fact I have an inkling that it may prove an indispensable tool if we were ever to formulate the ghosts and other unexplained phenomena.

There is no reason for a being to feel uncomfortable at places with dark horrid happenings (Haunted homes). The tormentor or the tormented don't exist anymore. But the uncanny feeling still chills at least some sensitive people to their spines. Even animals show reaction to them. They might just be unknowingly sensing this i, the imaginary.

Why? Science doesn't have an answer to these questions. Possibly because the science as it was developed by the western civilization fails to consider the possibility of anything beyond the material world that can be sensed by our physical senses alone.

We Indians in spite of our spiritual origins tend to think the same way. Not just due to our detachment from our original past but more so due to our affinity for the different perspective provided by it. But ignoring something doesn't justify its absence.

I feel that the Spiritual World is like an inverted cone with its tip in contact with a straight cone of Material World. (The spiritual buildings around the world are a way to reach this world). While the set of real numbers represent logically the parts of the material world, it is the i, the imaginary which defines the spiritual.

'i' is something that is omnipresent, in every number. We just tend to see the real part & ignore the i-maginary one. But whenever we apply operations (multiplication or division) on it we get a result different from what is logical for us. Only because the i-maginary part was ignored. Thus, time & again this imaginary part gives us signs of its presence. We may not understand its importance till we begin to acknowledge its presence.

I'd like to end the discussion with what I was taught to firmly believe at my Alma Mater – The Manik Public School. People in different regions acknowledge the spiritual through different deities or beliefs or culture or whatever is their way of life. But the ultimate truth is the same. This for me is the Sakhalamata Siddhanta.

Let me know what you think in the comments below. Happy thinking!

GURUJI: The beginning . . .

Shivani Gosha - 160715736068

Many many years ago . . . Somewhere in the forests of India.

Guruji started his first class on scriptures like this.

He inverted his kamandal & asked.

"Is the kamandal full?"

"No, it's empty" came a unified chorus.

He then put some mangoes into it. About 4 of them went in & no more could be added.

"Is it full now?" he asked again.

"Yes" came the reply from everyone.

The Guruji just smiled & put some berries into it. The berries took up empty spaces around the mangoes.

Some shishyas started laughing realizing their mistake.

"Is it full now?" he repeated the question.

"Yes," only half the shishyas answered.

The Guruji then put handfuls of seeds into it shaking the kamandal. The seeds took space left around mangoes & berries.

"What about now? Is it full now?" He asked.

The shishyas started staring at each other. They had been proved wrong 2 times already.

The Guruji's smile broadened seeing that his students were learning fast.

He then poured a dish full of water into it till it overflowed.

“Now,” he said, “the kamandal is full.”

He then put the kamandal aside & asked. “Tell me now, what have you learnt?”

“We can be wrong even when we are most confident.” said a student in the front row.

Another shishya stood up with joined hands, “We must always think twice before reaching conclusion”.

The guru was smiling at them seeing different viewpoints of his pupils. He waited patiently till everyone reviewed his lesson.

Then he continued “I am very happy to see you learn your lessons fast. Now I’ll tell you why I showed you this demonstration.” Everyone was silent listening. After all, the Guruji was not dealing with them.

“The kamandal represents our mind. Its contents represent what our mind understands. What did I put in it first?” he asked.

“The mangoes”, everyone shouted.

“Hmm…” Guruji continued “the mangoes represent the Vedas. They are the basis of all the knowledge. So the most important scriptures are the Vedas.”

He waited for the students to soak in the information.

“The berries represent Upanishads. They are the discourses between the learned beings. They are arguments which help us understand the Vedas in a better way.”

“The seeds represent Puranas. They give a form to the formless knowledge in Vedas which is discussed in the Upanishads. Puranas contain all those stories love hearing about. Their importance is next to the Upanishads.”, he said.

Everyone kept gaping at the Guruji.

“Can you guess what the water represents?”, he asked.

“The customs & rituals”, one of the sishyas answered after thinking for a while.

“Very good Gyan”, he said motioning him to sit. “If at any time there’s a doubt about a custom we look up towards the Puranas to clarify our doubts.”

“The Puranas resolve their contradiction in Upanishads. But if a question is raised on the Upanishads, Vedas must be used to clarify it.”

The Mangoes, Berries & seeds also represent the three stages of existence which together is captured in the symbol ॐ.

“Do you remember those stages from our previous class?” he enquired.

Vidya stood up with enthusiasm, “The 1st stage is ‘aaaa’, which is the beginning, the 2nd is ‘uuuu’ the life span & 3rd & final ‘mmmm’ represents end.”

"Very well Vidya. In every age, you are the 1 to answer." continued Guruji, then he closed his eyes & with joined hands uttered "'aaaaauuuuummmm'".

His sound resonated through all of them. He opened his eyes with an eternal smile on his face.

"ॐ is this cycle of everything & everyone."

"The mangoes represent 'aaaa'", he said "A good beginning is half done. If you know the Vedas you have understood more than half of all there is to know."

"The berries represent 'uuuu'. The Upanishad fill up half of the knowledge left around the Vedas."

"The seeds represent 'mmmm' – the end. The Puranas help you understand all that knowledge." He concluded.

"Also, everything in nature goes through the cycles of ॐ. A leaf sprouts on the branch of a tree. Lives there for some time. When it's purpose is over it goes back to earth."

"The tree itself goes through a cycle that is much much bigger. That has cycles of so many leaves, flowers & fruits."

"So it is with us humans, we are born, we live & we die completing the cycle."

"What represents the water Guruji", it was Gyan.

"Just like every time, Gyan", said Guruji, his eternal smile blooming much more with blissfulness.

"Every cycle follows a period of silence. A period, when the leaf gets digested. A period which prepares the leaf to be born as leaf again. It's the period which prepares for the next cycle."

The Guruji walked closer to Gyan. He looked into Gyan's eyes.

"We are meant to meet in many more cycles to come, Gyan. In every age, we'll have different purposes, different forms of knowledge & different experiences to deal with. But the message we'll end up giving to the world . . . Will always be the same."

Pressure your Coal!

Mr. Srikanth Rangdal, Assistant Professor

Chatur: I hate pressure!

Vidya: That's because you don't take stress.

Gyan: He doesn't have the capacity to take stress. Even a small pressure would easily fail him to tears.

Vidya: Gyan! You need to stop that discouraging tone of yours.

Guruji: Truth hurts. I see it's putting some pressure on chatur. But frankly, let's think can pressure work positively?

Vidya: Yes, most of the times when we are under pressure we tend to give our best. There is something inside that tells us that we cannot be knocked down.

Gyan: We feel the obligation to be up for ourselves…

Vidya: and for people around us who love us, who believe in us and look up to us!

Guruji: Well said Vidya. Chatur is lucky to have a well wisher like you. And Gyan, you must learn to appreciate that.

Chatur: Fact is, I don't wish to cross the path of disappointment. I do want to come out as a winner. But I don't want to compromise happiness.

Gyan: You can't gain something without losing something in return.

Guruji: A point I can't deny. But I'd like to add something to it. There needs to be a balance between what you lose for what you are gaining.

Gyan: Just like a pressure that's more than stress developed would definitely deform or fail it.

Vidya: Stress is the opposition provided by any material to externally applied pressure. Every material has a limit to which it can bear a pressure. It can only develop as much stress determined by is strength. Once the pressure crosses the stress that a material can handle it starts deforming & in expense cases it would break or fail.

Guruji: Thank you Vidya for your elaboration. Even Chatur would have understood it by now.

Chatur: Yes Guruji, I had seen that gigantic machine which was used to tear a wooden piece apart. It has something to do with our discussion.

Gyan: They were finding the maximum strength of the material.

Guruji: An excellent observation Gyan. You have been blessed with the ability to apply knowledge to practical situations. So coming back to my question. Can pressure work positively?

Vidya: We must face the pressure head on. With a positive attitude we must keep crossing milestones & continue adding more feathers to our cap.

Gyan: Under severe testing, we must take it as an opportunity to work hard and shine through our efforts. We must prove our worth in our own eyes.

Guruji: It would help to not do it for someone else or the world. Have self inspiration and compete with yourself. Then the pressure will definitely take you closer to your purpose!

Chatur: I understood Guruji. I got a WhatsApp message saying "A diamond is a coal that handled pressure exceptionally well." Bless me so that I can be a diamond.

CAD Corner

Some virtual models were in development long before the pandemics made us realise the importance of digital shift in educational methods. During lock down, I was able to model most of the assemblies in the syllabus and some more in 3D using Onshape.

METHODIST

COLLEGE OF ENGINEERING & TECHNOLOGY

Approved by AICTE, New Delhi & Affiliated to Osmania University

Accredited by NAAC with A+ Grade

Estd : 2008

INNOVATIVE TEACHING METHODOLOGY

3D INTERACTIVE PARTS, ASSEMBLIES & DRAWINGS IN ONSHAPE

Prepared by

Srikanth Rangdal, Assistant Professor, Dept of Mech. Engg., MCET

Courses benefitted

- Machine Drawing
- Machine Drawing & Modeling Lab
- Computer-Aided Production Drawing & CAM Lab

These assemblies bring to life the machines from the book Machine Drawing by K. L. Narayana. These can be interactively watched by students anytime anywhere & help them visualise in 3D.

Book Referred

Drawings from the book "Machine Drawing" by "K L Narayana" were referred for modelling the assemblies. (Creative freedom used wherever the 2D diagrams are incompatible with available CAD features.)

Benefit to the institute

The cost invested in physical models will be saved while actually significantly improving the overall experience of students.

Features / Facilities

The students will be able to carry out below-mentioned activities on the 3D Assemblies.

1. Interactively view 3D geometry of each part separately.
2. Apply sections on each part to observe & learn from the sectional view & hatching.
3. Assembly enables constrained Motion of parts relative to a fixed frame which students can manually drag on their smartphone screens.
4. Animation for the relative motion between constrained parts using a Desktop or Laptop.
5. Detailed drawing of each part is also provided in the same file so they can practice modelling the same in the software of their choice.
6. Drawing/s of assembly with balloons is provided for reference along with complete Bill of Materials
7. Sectional views can be created if required to watch internal components of an assembly in action.
8. Special Half sectional views or broken views provided wherever necessary for extra clear visualisation.
9. The files can be accessed easily through the link given below on any of the devices mentioned below:

Devices Supported

1. Smartphones / Tabs running iOS (iPhone & iPad) or Android or Chrome OS
2. Desktops / Laptops running Macintosh, Windows, Chrome OS or any variety of Linux with Chrome or other such supported Browser.
3. Sharing the file to students on mobile devices through the link. (Requirements: Android or iOS smartphone or desktop/laptop with supported browser)

Cost of equipment & software that student needs to access it

The educational version of OnShape is FREE. Any student can easily create the free account & then upgrade it to an educational version by filling the details of college & purpose of use. Any smartphone can work as good hardware.

Normally, I would have preferred to have them printed & pasted on the walls of the labs for you all to view & get inspired. But since the pandemics may not allow you all to return to college for normal classes for a long time, I thought adding them here to the magazine may be best to start with.

METHODIST
COLLEGE OF ENGINEERING & TECHNOLOGY

Approved by AICTE, New Delhi & Affiliated to Osmania University

Accredited by NAAC with A+ Grade

Estd : 2008

INNOVATIVE TEACHING METHODOLOGY - MR. SRIKANTH RANGDAL

RAMSBOTTOM SAFETY VALVE ASSEMBLY IN ONSHAPE

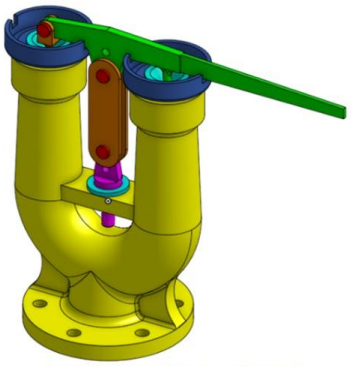

(PREPARED BY: SRIKANTH RANGDAL, MTECH IN AMS)

Operation	Procedure
1. 3D interactive rotating visualisation	⊕ Right Click & Drag to rotate objects. The objects rotate about the point at which right click is done.
2. Changing Dimensions	⊕ Select part studio from bottom or right click on the part in assembly & select "Switch to_____" option. ⊕ Edit the Sketch or Feature & Change dimensions suitably. ⊕ The changes will reflect in the assembly & drawing (upon refresh).
3. Moving the Assembly within constraints	⊕ Left Click on a link in 'assembly' & drag. ⊕ Left Click on a link in 'assembly' & then use the gizmo to move in specific direction
4. Section or Transparency	⊕ Click on the options below cube & select "Sectional View" & click on the part to create the sectional view. ⊕ Right click on any part & select "Make Transparent".
5. Isolate Parts	⊕ Right click on a part & select "Hide other instances" or hide parts one by one from the navigation.
6. Animate	⊕ Right Click on the Mate Features & Select Animate. ⊕ Change the limits of angles suitably & Click on Play.
7. 3D Print	⊕ Export the parts by right clicking the part studio & select suitable formats.
8. Learn to Model	⊕ Right click on any feature in the parts studio & select roll to here. ⊕ Then move it down step by step to see how the part was modelled.
9. Learn to Assemble	⊕ Create a fresh Assembly, insert parts & apply constraints one by one.
10. Check out the part drawings	⊕ Click on the drawing studio & check the orthographic views of parts with dimensioning & production details wherever available.
11. Exploded View	⊕ Click on the exploded view option on the right in assembly to create.

You may send me a direct message on whatsapp to get access to the interactive models on your mobile. You may need to register an account with onshape & install the app on your smartphone to use it. The entire procedure & a quick demo video will be shared to you. Make the best use of these.

METHODIST

COLLEGE OF ENGINEERING & TECHNOLOGY

Approved by AICTE, New Delhi & Affiliated to Osmania University

Accredited by NAAC with A+ Grade

Estd : 2008

INNOVATIVE TEACHING METHODOLOGY - MR. SRIKANTH RANGDAL

TAILSTOCK ASSEMBLY IN ONSHAPE

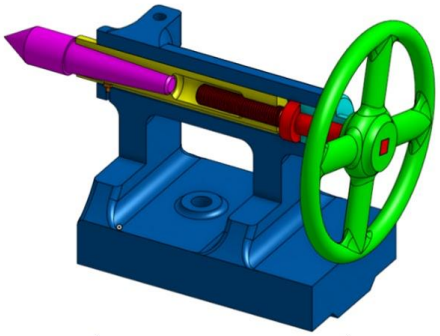

(PREPARED BY: SRIKANTH RANGDAL, MTECH IN AMS)

Operation	Procedure
1. 3D interactive rotating visualisation	⊕ Right Click & Drag to rotate objects. The objects rotate about the point at which right click is done.
2. Changing Dimensions	⊕ Select part studio from bottom or right click on the part in assembly & select "Switch to_____" option. ⊕ Edit the Sketch or Feature & Change dimensions suitably. ⊕ The changes will reflect in the assembly & drawing (upon refresh).
3. Moving the Assembly within constraints	⊕ Left Click on a link in 'assembly' & drag. ⊕ Left Click on a link in 'assembly' & then use the gizmo to move in specific direction
4. Section or Transparency	⊕ Click on the options below cube & select "Sectional View" & click on the part to create the sectional view. ⊕ Right click on any part & select "Make Transparent".
5. Isolate Parts	⊕ Right click on a part & select "Hide other instances" or hide parts one by one from the navigation.
6. Animate	⊕ Right Click on the Mate Features & Select Animate. ⊕ Change the limits of angles suitably & Click on Play.
7. 3D Print	⊕ Export the parts by right clicking the part studio & select suitable formats.
8. Learn to Model	⊕ Right click on any feature in the parts studio & select roll to here. ⊕ Then move it down step by step to see how the part was modelled.
9. Half Sectional View	⊕ Verification of the faces visible in half sectional view. ⊕ Edges to hide in the other half also can be verified.
10. Learn to Assemble	⊕ Create a fresh Assembly, insert parts & apply constraints one by one.
11. Check out the part drawings	⊕ Click on the drawing studio & check the orthographic views of parts with dimensioning & production details wherever available.
12. Exploded View	⊕ Click on the exploded view option on the right in assembly to create.

For long these machine parts have been represented in static 2D format in text books. These interactive models bring them to life through the tech which is present in everyone's pockets nowadays. In the coming time, all the faculties will start using these models in their classes as well.

METHODIST
COLLEGE OF ENGINEERING & TECHNOLOGY

Approved by AICTE, New Delhi & Affiliated to Osmania University

Accredited by NAAC with A+ Grade

Estd : 2008

INNOVATIVE TEACHING METHODOLOGY - MR. SRIKANTH RANGDAL

AIR COCK ASSEMBLY IN ONSHAPE

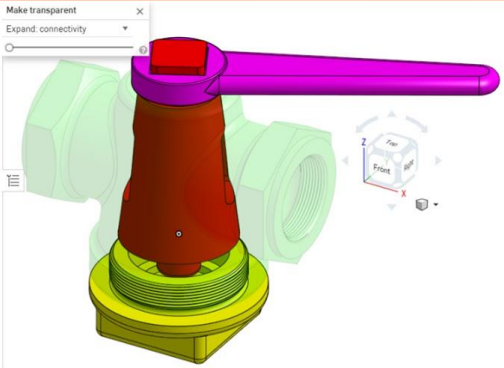

(PREPARED BY: SRIKANTH RANGDAL, MTECH IN AMS)

Operation	Procedure
1. 3D interactive rotating visualisation	⊕ Right Click & Drag to rotate objects. The objects rotate about the point at which right click is done.
2. Changing Dimensions	⊕ Select part studio from bottom or right click on the part in assembly & select "Switch to_____" option. ⊕ Edit the Sketch or Feature & Change dimensions suitably. ⊕ The changes will reflect in the assembly & drawing (upon refresh).
3. Moving the Assembly within constraints	⊕ Left Click on a link in 'assembly' & drag. ⊕ Left Click on a link in 'assembly' & then use the gizmo to move in specific direction
4. Section or Transparency	⊕ Click on the options below cube & select "Sectional View" & click on the part to create the sectional view. ⊕ Right click on any part & select "Make Transparent".
5. Isolate Parts	⊕ Right click on a part & select "Hide other instances" or hide parts one by one from the navigation.
6. Animate	⊕ Right Click on the Mate Features & Select Animate. ⊕ Change the limits of angles suitably & Click on Play.
7. 3D Print	⊕ Export the parts by right clicking the part studio & select suitable formats.
8. Learn to Model	⊕ Right click on any feature in the parts studio & select roll to here. ⊕ Then move it down step by step to see how the part was modelled.
9. Half Sectional View	⊕ Verification of the faces visible in half sectional view. ⊕ Edges to hide in the other half also can be verified.
10. Learn to Assemble	⊕ Create a fresh Assembly, insert parts & apply constraints one by one.
11. Check out the part drawings	⊕ Click on the drawing studio & check the orthographic views of parts with dimensioning & production details wherever available.
12. Exploded View	⊕ Click on the exploded view option on the right in assembly to create.

Physical machine parts are bulky & can't be made accessible to everyone at the same time due to physical limitations. But with these virtual models, I am giving you all a copy of your own machine part which you can open whenever you feel like it on your mobile & start understanding its motion & interconnections. Hope you all make the best use of these.

METHODIST

COLLEGE OF ENGINEERING & TECHNOLOGY

Approved by AICTE, New Delhi & Affiliated to Osmania University

Accredited by NAAC with A+ Grade

Estd : 2008

INNOVATIVE TEACHING METHODOLOGY - MR. SRIKANTH RANGDAL

SWIVEL VICE ASSEMBLY IN ONSHAPE

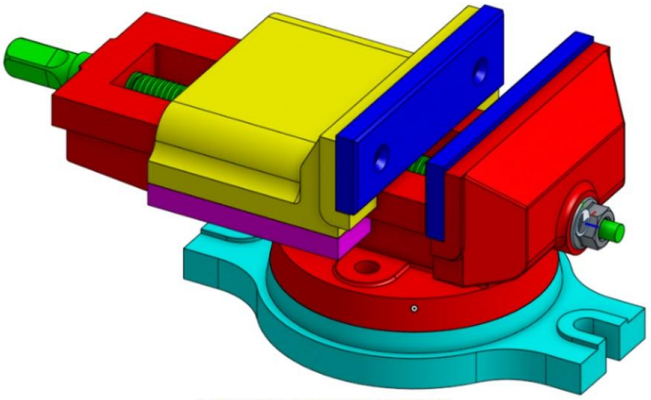

(PREPARED BY: SRIKANTH RANGDAL, MTECH IN AMS)

Operation	Procedure
1. 3D interactive rotating visualisation	➔ Right Click & Drag to rotate objects. The objects rotate about the point at which right click is done.
2. Changing Dimensions	➔ Select part studio from bottom or right click on the part in assembly & select "Switch to_____" option. ➔ Edit the Sketch or Feature & Change dimensions suitably. ➔ The changes will reflect in the assembly & drawing (upon refresh).
3. Moving the Assembly within constraints	➔ Left Click on a link in 'assembly' & drag. ➔ Left Click on a link in 'assembly' & then use the gizmo to move in specific direction
4. Section or Transparency	➔ Click on the options below cube & select "Sectional View" & click on the part to create the sectional view. ➔ Right click on any part & select "Make Transparent".
5. Isolate Parts	➔ Right click on a part & select "Hide other instances" or hide parts one by one from the navigation.
6. Animate	➔ Right Click on the Mate Features & Select Animate. ➔ Change the limits of angles suitably & Click on Play.
7. 3D Print	➔ Export the parts by right clicking the part studio & select suitable formats.
8. Learn to Model	➔ Right click on any feature in the parts studio & select roll to here. ➔ Then move it down step by step to see how the part was modelled.
9. Learn to Assemble	➔ Create a fresh Assembly, insert parts & apply constraints one by one.
10. Check out the part drawings	➔ Click on the drawing studio & check the orthographic views of parts with dimensioning & production details wherever available.
11. Exploded View	➔ Click on the exploded view option on the right in assembly to create.

I know some of you may be interested to work on developing these further. In future, we may start a CAD Club in which you can participate. I will teach you all the skills required & will be there to guide you out of any problem. You may help me create, maintain & improve these virtual models which will be available for all the youngsters coming after you.

METHODIST
COLLEGE OF ENGINEERING & TECHNOLOGY
Approved by AICTE, New Delhi & Affiliated to Osmania University
Accredited by NAAC with A+ Grade
Estd : 2008

INNOVATIVE TEACHING METHODOLOGY - MR. SRIKANTH RANGDAL

DOUBLE COTTERED SLEEVE JOINT ASSEMBLY IN ONSHAPE

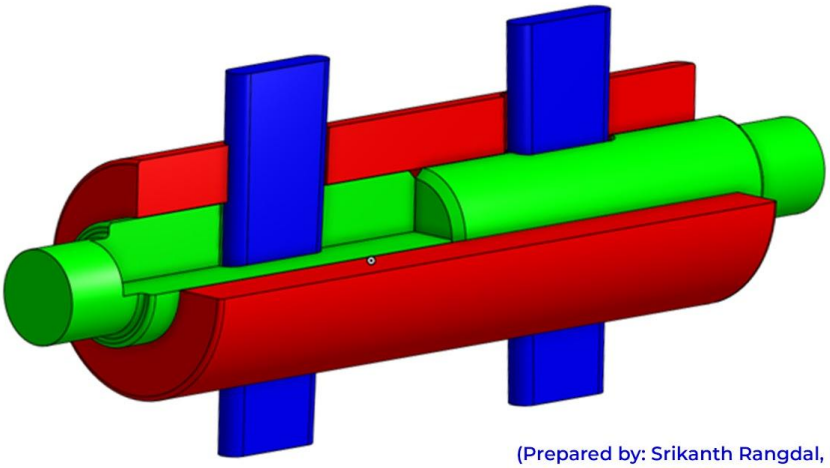

(Prepared by: Srikanth Rangdal, MTech in AMS)

Operation	Procedure
1. 3D interactive rotating visualisation.	➔ Right Click & Drag to rotate objects. The objects rotate about the point at which right click is done.
2. Changing Dimensions	➔ Select part studio from bottom or right click on the part in assembly & select "Switch to_____" option. ➔ Edit the Sketch or Feature & Change dimensions suitably. ➔ The changes will reflect in the assembly & drawing (upon refresh).
3. Moving the Assembly within constraints.	➔ Left Click on a link in 'assembly' & drag. ➔ Left Click on a link in 'assembly' & then use the gizmo to move in specific direction.
4. Section or Transparency	➔ Click on the options below cube & select "Sectional View" & click on the part to create the sectional view. ➔ Right click on any part & select "Make Transparent".
5. Isolate Parts	➔ Right click on a part & select "Hide other instances" or hide parts one by one from the navigation.
6. Animate	➔ Right Click on the Mate Features & Select Animate. ➔ Change the limits of angles suitably & Click on Play.
7. 3D Print	➔ Export the parts by right clicking the part studio & select suitable formats.
8. Learn to Model	➔ Right click on any feature in the parts studio & select roll to here. ➔ Then move it down step by step to see how the part was modelled.
9. Half Sectional View	➔ Verification of the faces visible in half sectional view. ➔ Edges to hide in the other half also can be verified.
10. Learn to Assemble	➔ Create a fresh Assembly, insert parts & apply constraints one by one.
11. Check out the part drawings	➔ Click on the drawing studio & check the orthographic views of parts with dimensioning & production details wherever available.
12. Exploded View	➔ Click on the exploded view option on the right in assembly to create

METHODIST

COLLEGE OF ENGINEERING & TECHNOLOGY

Approved by AICTE, New Delhi & Affiliated to Osmania University

Accredited by NAAC with A+ Grade

Estd : 2008

INNOVATIVE TEACHING METHODOLOGY - MR. SRIKANTH RANGDAL

KNUCKLE JOINT ASSEMBLY IN ONSHAPE

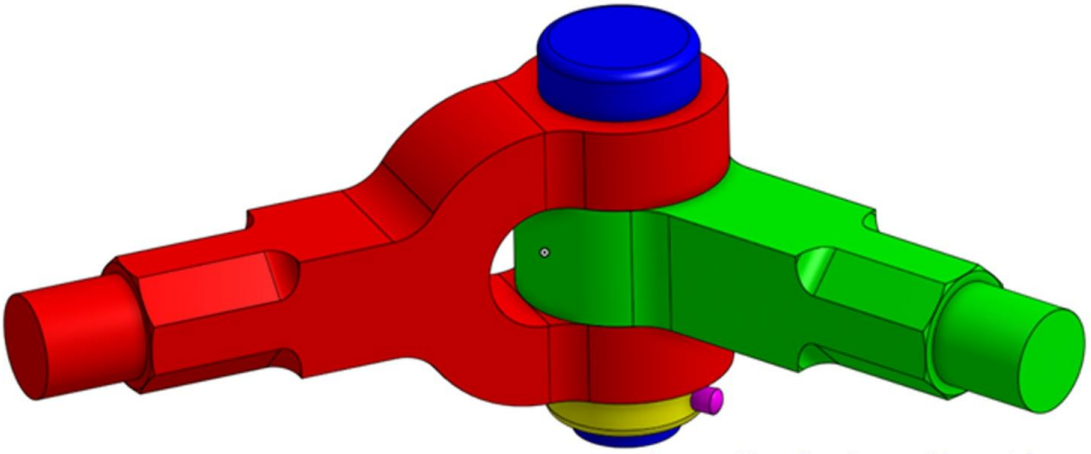

(Prepared by: Srikanth Rangdal, MTech in AMS)

Operation	Procedure
1. 3D interactive rotating visualisation.	➔ Right Click & Drag to rotate objects. The objects rotate about the point at which right click is done.
2. Changing Dimensions	➔ Select part studio from bottom or right click on the part in assembly & select "Switch to_____" option. ➔ Edit the Sketch or Feature & Change dimensions suitably. ➔ The changes will reflect in the assembly & drawing (upon refresh).
3. Moving the Assembly within constraints.	➔ Left Click on a link in 'assembly' & drag. ➔ Left Click on a link in 'assembly' & then use the gizmo to move in specific direction.
4. Section or Transparency	➔ Click on the options below cube & select "Sectional View" & click on the part to create the sectional view. ➔ Right click on any part & select "Make Transparent".
5. Isolate Parts	➔ Right click on a part & select "Hide other instances" or hide parts one by one from the navigation.
6. Animate	➔ Right Click on the Mate Features & Select Animate. ➔ Change the limits of angles suitably & Click on Play.
7. 3D Print	➔ Export the parts by right clicking the part studio & select suitable formats.
8. Learn to Model	➔ Right click on any feature in the parts studio & select roll to here. ➔ Then move it down step by step to see how the part was modelled.
9. Half Sectional View	➔ Verification of the faces visible in half sectional view. ➔ Edges to hide in the other half also can be verified.
10. Learn to Assemble	➔ Create a fresh Assembly, insert parts & apply constraints one by one.
11. Check out the part drawings	➔ Click on the drawing studio & check the orthographic views of parts with dimensioning & production details wherever available.
12. Exploded View	➔ Click on the exploded view option on the right in assembly to create

METHODIST
COLLEGE OF ENGINEERING & TECHNOLOGY
Approved by AICTE, New Delhi & Affiliated to Osmania University
Accredited by NAAC with A+ Grade
Estd : 2008

INNOVATIVE TEACHING METHODOLOGY - MR. SRIKANTH RANGDAL

SOCKET SPIGOT JOINT / COTTERED JOINT IN ONSHAPE

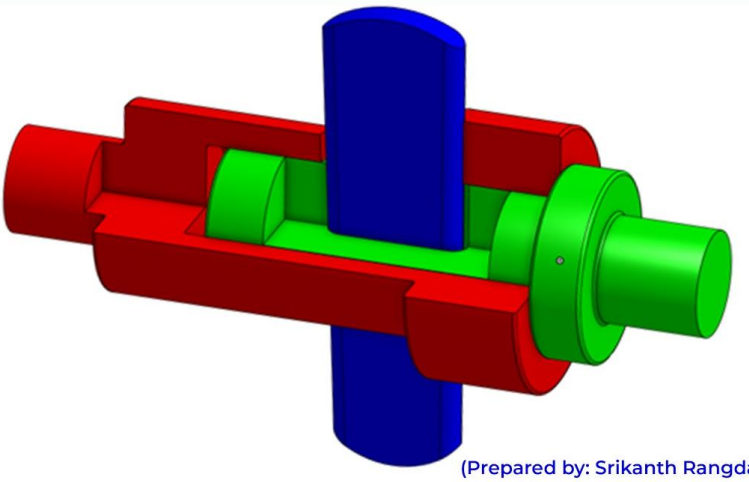

(Prepared by: Srikanth Rangdal, MTech in AMS)

Operation	Procedure
1. 3D interactive rotating visualisation.	➔ Right Click & Drag to rotate objects. The objects rotate about the point at which right click is done.
2. Changing Dimensions	➔ Select part studio from bottom or right click on the part in assembly & select "Switch to_____" option. ➔ Edit the Sketch or Feature & Change dimensions suitably. ➔ The changes will reflect in the assembly & drawing (upon refresh).
3. Moving the Assembly within constraints.	➔ Left Click on a link in 'assembly' & drag. ➔ Left Click on a link in 'assembly' & then use the gizmo to move in specific direction.
4. Section or Transparency	➔ Click on the options below cube & select "Sectional View" & click on the part to create the sectional view. ➔ Right click on any part & select "Make Transparent".
5. Isolate Parts	➔ Right click on a part & select "Hide other instances" or hide parts one by one from the navigation.
6. Animate	➔ Right Click on the Mate Features & Select Animate. ➔ Change the limits of angles suitably & Click on Play.
7. 3D Print	➔ Export the parts by right clicking the part studio & select suitable formats.
8. Learn to Model	➔ Right click on any feature in the parts studio & select roll to here. ➔ Then move it down step by step to see how the part was modelled.
9. Half Sectional View	➔ Verification of the faces visible in half sectional view. ➔ Edges to hide in the other half also can be verified.
10. Learn to Assemble	➔ Create a fresh Assembly, insert parts & apply constraints one by one.
11. Check out the part drawings	➔ Click on the drawing studio & check the orthographic views of parts with dimensioning & production details wherever available.
12. Exploded View	➔ Click on the exploded view option on the right in assembly to create

METHODIST
COLLEGE OF ENGINEERING & TECHNOLOGY
Approved by AICTE, New Delhi & Affiliated to Osmania University
Accredited by NAAC with A+ Grade
Estd : 2008

INNOVATIVE TEACHING METHODOLOGY - MR. SRIKANTH RANGDAL

SOCKET SPIGOT JOINT / COTTERED JOINT IN ONSHAPE

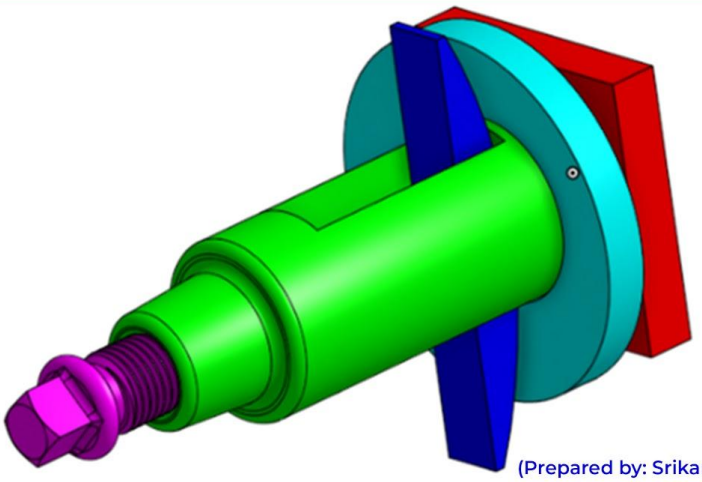

(Prepared by: Srikanth Rangdal, MTech in AMS)

Operation	Procedure
1. 3D interactive rotating visualisation.	➔ Right Click & Drag to rotate objects. The objects rotate about the point at which right click is done.
2. Changing Dimensions	➔ Select part studio from bottom or right click on the part in assembly & select "Switch to_____" option. ➔ Edit the Sketch or Feature & Change dimensions suitably. ➔ The changes will reflect in the assembly & drawing (upon refresh).
3. Moving the Assembly within constraints.	➔ Left Click on a link in 'assembly' & drag. ➔ Left Click on a link in 'assembly' & then use the gizmo to move in specific direction.
4. Section or Transparency	➔ Click on the options below cube & select "Sectional View" & click on the part to create the sectional view. ➔ Right click on any part & select "Make Transparent".
5. Isolate Parts	➔ Right click on a part & select "Hide other instances" or hide parts one by one from the navigation.
6. Animate	➔ Right Click on the Mate Features & Select Animate. ➔ Change the limits of angles suitably & Click on Play.
7. 3D Print	➔ Export the parts by right clicking the part studio & select suitable formats.
8. Learn to Model	➔ Right click on any feature in the parts studio & select roll to here. ➔ Then move it down step by step to see how the part was modelled.
9. Half Sectional View	➔ Verification of the faces visible in half sectional view. ➔ Edges to hide in the other half also can be verified.
10. Learn to Assemble	➔ Create a fresh Assembly, insert parts & apply constraints one by one.
11. Check out the part drawings	➔ Click on the drawing studio & check the orthographic views of parts with dimensioning & production details wherever available.
12. Exploded View	➔ Click on the exploded view option on the right in assembly to create

METHODIST
COLLEGE OF ENGINEERING & TECHNOLOGY
Approved by AICTE, New Delhi & Affiliated to Osmania University
Accredited by NAAC with A+ Grade
Estd : 2008

INNOVATIVE TEACHING METHODOLOGY - MR. SRIKANTH RANGDAL

SOCKET SPIGOT JOINT / COTTERED JOINT IN ONSHAPE

(Prepared by: Srikanth Rangdal, MTech in AMS)

Operation	Procedure
1. 3D interactive rotating visualisation.	➔ Right Click & Drag to rotate objects. The objects rotate about the point at which right click is done.
2. Changing Dimensions	➔ Select part studio from bottom or right click on the part in assembly & select "Switch to_____" option. ➔ Edit the Sketch or Feature & Change dimensions suitably. ➔ The changes will reflect in the assembly & drawing (upon refresh).
3. Moving the Assembly within constraints.	➔ Left Click on a link in 'assembly' & drag. ➔ Left Click on a link in 'assembly' & then use the gizmo to move in specific direction.
4. Animate	➔ Right Click on the Mate Features & Select Animate. ➔ Change the limits of angles suitably & Click on Play.
5. Section or Transparency	➔ Click on the options below cube & select "Sectional View" & click on the part to create the sectional view. ➔ Right click on any part & select "Make Transparent".
6. Isolate Parts	➔ Right click on a part & select "Hide other instances" or hide parts one by one from the navigation.
7. 3D Print	➔ Export the parts by right clicking the part studio & select suitable formats.
8. Learn to Model	➔ Right click on any feature in the parts studio & select roll to here. ➔ Then move it down step by step to see how the part was modelled.
9. Learn to Assemble	➔ Create a fresh Assembly, insert parts & apply constraints one by one.
10. Check out the part drawings	➔ Click on the drawing studio & check the orthographic views of parts with dimensioning & production details wherever available.
11. Exploded View	➔ Click on the exploded view option on the right in assembly to create

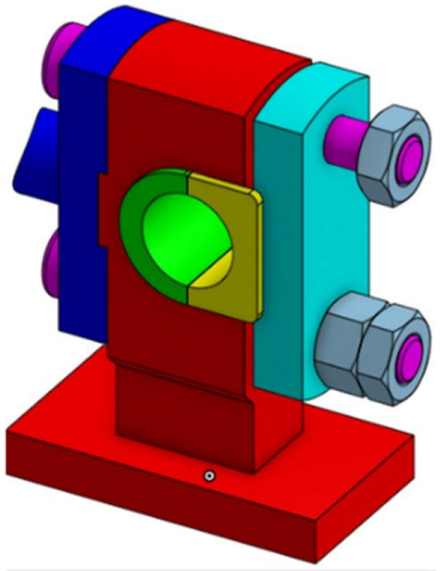

METHODIST
COLLEGE OF ENGINEERING & TECHNOLOGY
Approved by AICTE, New Delhi & Affiliated to Osmania University
Accredited by NAAC with A+ Grade
Estd : 2008

INNOVATIVE TEACHING METHODOLOGY - MR. SRIKANTH RANGDAL

JIG PLATE ASSEMBLY IN ONSHAPE

(Prepared by: Srikanth Rangdal, MTech in AMS)

Operation	Procedure	
1. 3D interactive rotating visualisation.	➔ Right Click & Drag to rotate objects. The objects rotate about the point at which right click is done.	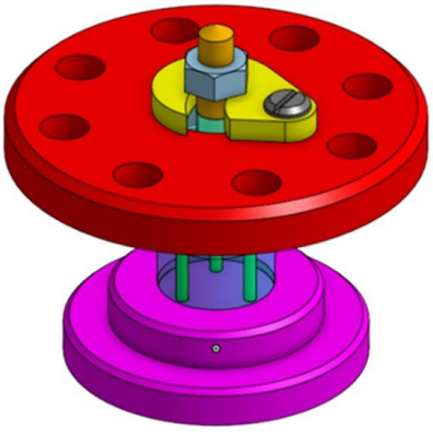
2. Changing Dimensions	➔ Select part studio from bottom or right click on the part in assembly & select "Switch to_____" option. ➔ Edit the Sketch or Feature & Change dimensions suitably. ➔ The changes will reflect in the assembly & drawing (upon refresh).	
3. Moving the Assembly within constraints.	➔ Left Click on a link in 'assembly' & drag. ➔ Left Click on a link in 'assembly' & then use the gizmo to move in specific direction.	
4. Animate	➔ Right Click on the Mate Features & Select Animate. ➔ Change the limits of angles suitably & Click on Play.	
5. Section or Transparency	➔ Click on the options below cube & select "Sectional View" & click on the part to create the sectional view. ➔ Right click on any part & select "Make Transparent".	
6. Isolate Parts	➔ Right click on a part & select "Hide other instances" or hide parts one by one from the navigation.	
7. 3D Print	➔ Export the parts by right clicking the part studio & select suitable formats.	
8. Learn to Model	➔ Right click on any feature in the parts studio & select roll to here. ➔ Then move it down step by step to see how the part was modelled.	
9. Learn to Assemble	➔ Create a fresh Assembly, insert parts & apply constraints one by one.	
10. Check out the part drawings	➔ Click on the drawing studio & check the orthographic views of parts with dimensioning & production details wherever available.	
11. Exploded View	➔ Click on the exploded view option on the right in assembly to create	

METHODIST
COLLEGE OF ENGINEERING & TECHNOLOGY
Approved by AICTE, New Delhi & Affiliated to Osmania University
Accredited by NAAC with A+ Grade
Estd : 2008

INNOVATIVE TEACHING METHODOLOGY - MR. SRIKANTH RANGDAL

CRANE HOOK ASSEMBLY IN ONSHAPE

(Prepared by: Srikanth Rangdal, MTech in AMS)

Operation	Procedure	
1. 3D interactive rotating visualisation.	➔ Right Click & Drag to rotate objects. The objects rotate about the point at which right click is done.	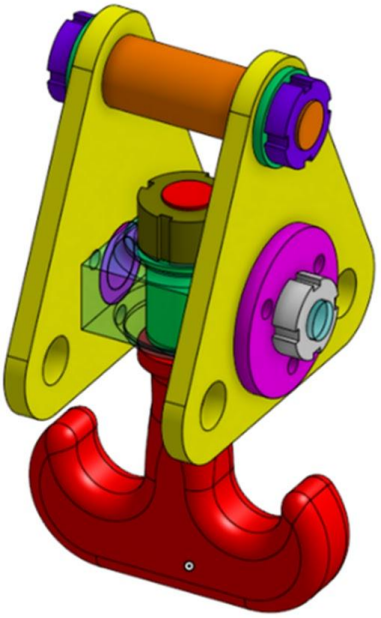
2. Changing Dimensions	➔ Select part studio from bottom or right click on the part in assembly & select "Switch to_____" option. ➔ Edit the Sketch or Feature & Change dimensions suitably. ➔ The changes will reflect in the assembly & drawing (upon refresh).	
3. Moving the Assembly within constraints.	➔ Left Click on a link in 'assembly' & drag. ➔ Left Click on a link in 'assembly' & then use the gizmo to move in specific direction.	
4. Animate	➔ Right Click on the Mate Features & Select Animate. ➔ Change the limits of angles suitably & Click on Play.	
5. Section or Transparency	➔ Click on the options below cube & select "Sectional View" & click on the part to create the sectional view. ➔ Right click on any part & select "Make Transparent".	
6. Isolate Parts	➔ Right click on a part & select "Hide other instances" or hide parts one by one from the navigation.	
7. 3D Print	➔ Export the parts by right clicking the part studio & select suitable formats.	
8. Learn to Model	➔ Right click on any feature in the parts studio & select roll to here. ➔ Then move it down step by step to see how the part was modelled.	
9. Learn to Assemble	➔ Create a fresh Assembly, insert parts & apply constraints one by one.	
10. Check out the part drawings	➔ Click on the drawing studio & check the orthographic views of parts with dimensioning & production details wherever available.	
11. Exploded View	➔ Click on the exploded view option on the right in assembly to create	

METHODIST
COLLEGE OF ENGINEERING & TECHNOLOGY
Approved by AICTE, New Delhi & Affiliated to Osmania University
Accredited by NAAC with A+ Grade
Estd : 2008

INNOVATIVE TEACHING METHODOLOGY - MR. SRIKANTH RANGDAL

ECCENTRIC ASSEMBLY IN ONSHAPE

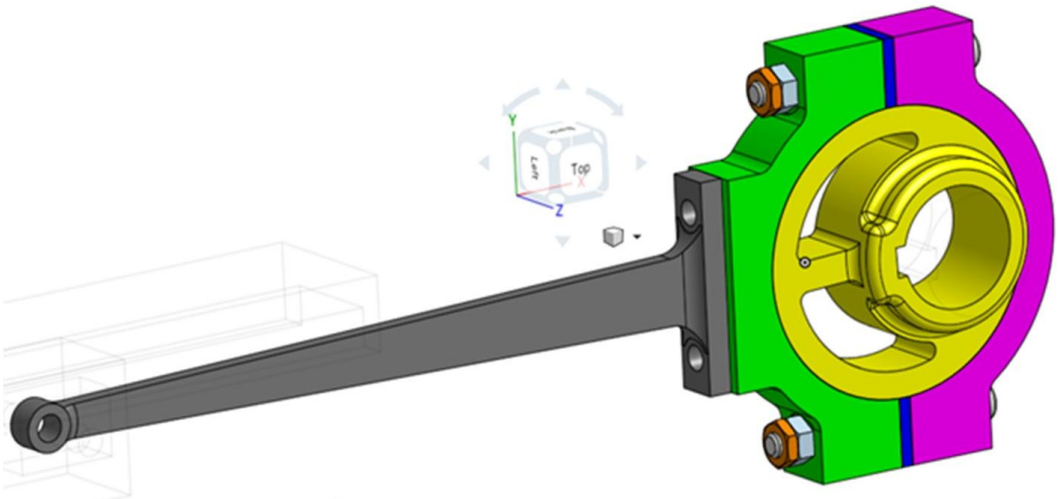

Operation	Procedure
1. 3D interactive rotating visualisation.	Right Click & Drag to rotate objects. The objects rotate about the point at which right click is done.
2. Changing Dimensions	Select part studio from bottom or right click on the part in assembly & select "Switch to_____" option. Edit the Sketch or Feature & Change dimensions suitably. The changes will reflect in the assembly & drawing (upon refresh).
3. Moving the Assembly within constraints.	Left Click on a link in 'assembly' & drag. Left Click on a link in 'assembly' & then use the gizmo to move in specific direction.
4. Animate	Right Click on the Mate Features & Select Animate. Change the limits of angles suitably & Click on Play.
5. 3D Print	Export the parts by right clicking the part studio & select suitable formats.
6. Learn to Model	Right click on any feature in the parts studio & select roll to here. Then move it down step by step to see how the part was modelled.
7. Learn to Assemble	Create a fresh Assembly, insert parts & apply constraints one by one.
8. Check out the part drawings	Click on the drawing studio & check the orthographic views of parts with dimensioning & production details wherever available.
9. Exploded View	Click on the exploded view option on the right in assembly to create

METHODIST

COLLEGE OF ENGINEERING & TECHNOLOGY

Approved by AICTE, New Delhi & Affiliated to Osmania University

Accredited by NAAC with A+ Grade

Estd : 2008

INNOVATIVE TEACHING METHODOLOGY - MR. SRIKANTH RANGDAL

SCREW JACK ASSEMBLY IN ONSHAPE

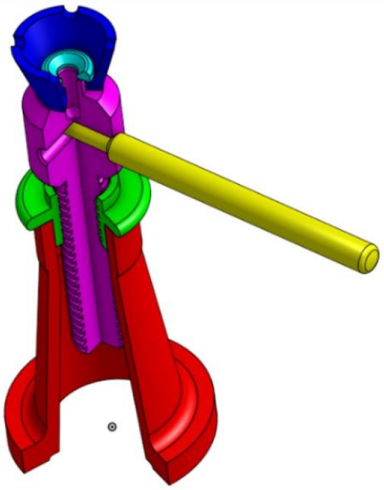

(PREPARED BY: SRIKANTH RANGDAL, MTECH IN AMS)

Operation	Procedure
1. 3D interactive rotating visualisation.	➔ Right Click & Drag to rotate objects. The objects rotate about the point at which right click is done.
2. Changing Dimensions	➔ Select part studio from bottom or right click on the part in assembly & select "Switch to_____" option. ➔ Edit the Sketch or Feature & Change dimensions suitably. ➔ The changes will reflect in the assembly & drawing (upon refresh).
3. Half Sectional View	➔ Verification of the faces visible in half sectional view. ➔ Edges to hide in the other half also can be verified.
4. Moving the Assembly within constraints	➔ Left Click on a link in 'assembly' & drag. ➔ Left Click on a link in 'assembly' & then use the gizmo to move in specific direction.
5. Animate	➔ Right Click on the Mate Features & Select Animate. ➔ Change the limits of angles suitably & Click on Play.
6. 3D Print	➔ Export the parts by right clicking the part studio & select suitable formats
7. Learn to Model	➔ Right click on any feature in the parts studio & select roll to here. ➔ Then move it down step by step to see how the part was modelled.
8. Learn to Assemble	➔ Create a fresh Assembly, insert parts & apply constraints one by one.
9. Check out the part drawings	➔ Click on the drawing studio & check the orthographic views of parts with dimensioning & production details wherever available.
10. Exploded View	➔ Click on the exploded view option on the right in assembly to create.

METHODIST
COLLEGE OF ENGINEERING & TECHNOLOGY
Approved by AICTE, New Delhi & Affiliated to Osmania University
Accredited by NAAC with A+ Grade
Estd : 2008

INNOVATIVE TEACHING METHODOLOGY - MR. SRIKANTH RANGDAL

NON-RETURN VALVE ASSEMBLY IN ONSHAPE

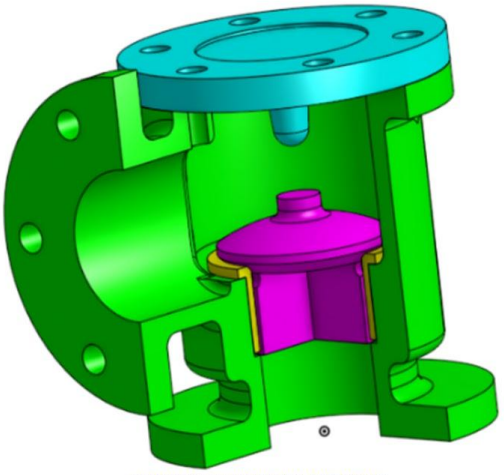

(PREPARED BY: SRIKANTH RANGDAL, MTECH IN AMS)

Operation	Procedure
1. 3D interactive rotating visualisation.	➔ Right Click & Drag to rotate objects. The objects rotate about the point at which right click is done.
2. Changing Dimensions	➔ Select part studio from bottom or right click on the part in assembly & select "Switch to_____" option. ➔ Edit the Sketch or Feature & Change dimensions suitably. ➔ The changes will reflect in the assembly & drawing (upon refresh).
3. Moving the Assembly within constraints	➔ Left Click on a link in 'assembly' & drag. ➔ Left Click on a link in 'assembly' & then use the gizmo to move in specific direction
4. Animate	➔ Right Click on the Mate Features & Select Animate. ➔ Change the limits of angles suitably & Click on Play.
5. Half Sectional View	➔ Verification of the faces visible in half sectional view. ➔ Edges to hide in the other half also can be verified.
6. 3D Print	➔ Export the parts by right clicking the part studio & select suitable formats.
7. Learn to Model	➔ Right click on any feature in the parts studio & select roll to here. ➔ Then move it down step by step to see how the part was modelled.
8. Learn to Assemble	➔ Create a fresh Assembly, insert parts & apply constraints one by one.
9. Check out the part drawings	➔ Click on the drawing studio & check the orthographic views of parts with dimensioning & production details wherever available.
10. Exploded View	➔ Click on the exploded view option on the right in assembly to create.

METHODIST
COLLEGE OF ENGINEERING & TECHNOLOGY
Approved by AICTE, New Delhi & Affiliated to Osmania University
Accredited by NAAC with A+ Grade
Estd : 2008

INNOVATIVE TEACHING METHODOLOGY - MR. SRIKANTH RANGDAL

FEED CHECK VALVE ASSEMBLY IN ONSHAPE

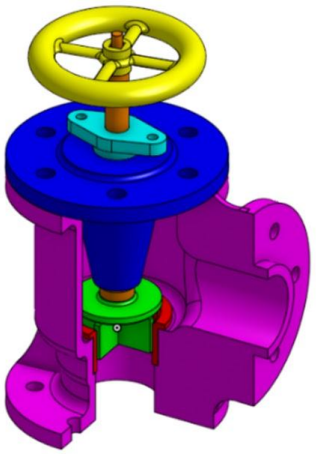

(PREPARED BY: SRIKANTH RANGDAL, MTECH IN AMS)

Operation	Procedure
1. 3D interactive rotating visualisation.	➔ Right Click & Drag to rotate objects. The objects rotate about the point at which right click is done.
2. Changing Dimensions	➔ Select part studio from bottom or right click on the part in assembly & select "Switch to_____" option. ➔ Edit the Sketch or Feature & Change dimensions suitably. ➔ The changes will reflect in the assembly & drawing (upon refresh).
3. Moving the Assembly within constraints	➔ Left Click on a link in 'assembly' & drag. ➔ Left Click on a link in 'assembly' & then use the gizmo to move in specific direction
4. Section or Transparency	➔ Click on the options below cube & select "Sectional View" & click on the part to create the sectional view. ➔ Right click on any part & select "Make Transparent".
5. Isolate Parts	➔ Right click on a part & select "Hide other instances" or hide parts one by one from the navigation.
6. Animate	➔ Right Click on the Mate Features & Select Animate. ➔ Change the limits of angles suitably & Click on Play.
7. 3D Print	➔ Export the parts by right clicking the part studio & select suitable formats.
8. Learn to Model	➔ Right click on any feature in the parts studio & select roll to here. ➔ Then move it down step by step to see how the part was modelled.
9. Half Sectional View	➔ Verification of the faces visible in half sectional view. ➔ Edges to hide in the other half also can be verified.
10. Learn to Assemble	➔ Create a fresh Assembly, insert parts & apply constraints one by one.
11. Check out the part drawings	➔ Click on the drawing studio & check the orthographic views of parts with dimensioning & production details wherever available.
12. Exploded View	➔ Click on the exploded view option on the right in assembly to create.

METHODIST
COLLEGE OF ENGINEERING & TECHNOLOGY
Approved by AICTE, New Delhi & Affiliated to Osmania University
Accredited by NAAC with A+ Grade
Estd : 2008

INNOVATIVE TEACHING METHODOLOGY - MR. SRIKANTH RANGDAL

FEED CHECK VALVE ASSEMBLY IN ONSHAPE

Flawed design as given in the book
(Doesn't transmit motion)

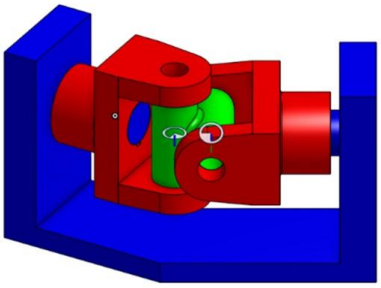

Corrected design
(Motion transmitted properly)

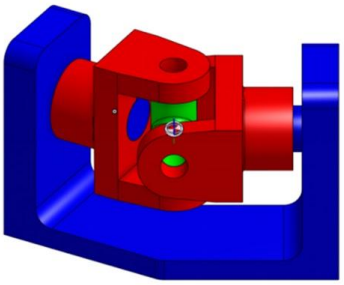

(PREPARED BY: SRIKANTH RANGDAL, MTECH IN AMS)

Operation	Procedure
1. 3D interactive rotating visualisation.	➔ Right Click & Drag to rotate objects. The objects rotate about the point at which right click is done.
2. Changing Dimensions	➔ Select part studio from bottom or right click on the part in assembly & select "Switch to_____" option. ➔ Edit the Sketch or Feature & Change dimensions suitably. ➔ The changes will reflect in the assembly & drawing (upon refresh).
3. Moving the Assembly within constraints	➔ Left Click on a link in 'assembly' & drag. ➔ Left Click on a link in 'assembly' & then use the gizmo to move in specific direction
4. Identification of the design flaw	➔ The design given in the book cannot transmit motion across inclined shafts. The same can be verified.
5. Animate	➔ Right Click on the Mate Features & Select Animate. ➔ Change the limits of angles suitably & Click on Play.
6. 3D Print	➔ Export the parts by right clicking the part studio & select suitable formats.
7. Learn to Model	➔ Right click on any feature in the parts studio & select roll to here. ➔ Then move it down step by step to see how the part was modelled.
8. Learn to Assemble	➔ Create a fresh Assembly, insert parts & apply constraints one by one.
9. Check out the part drawings	➔ Click on the drawing studio & check the orthographic views of parts with dimensioning & production details wherever available.
10. Exploded View	➔ Click on the exploded view option on the right in assembly to create.

METHODIST
COLLEGE OF ENGINEERING & TECHNOLOGY
Approved by AICTE, New Delhi & Affiliated to Osmania University
Accredited by NAAC with A+ Grade
Estd : 2008

INNOVATIVE TEACHING METHODOLOGY - MR. SRIKANTH RANGDAL

4 JAW INDEPENDENT CHUCK ASSEMBLY IN ONSHAPE

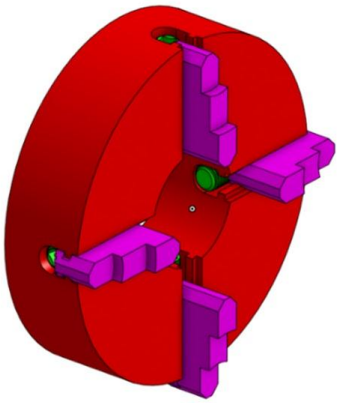

(PREPARED BY: SRIKANTH RANGDAL, MTECH IN AMS)

Operation	Procedure
1. 3D interactive rotating visualisation	➔ Right Click & Drag to rotate objects. The objects rotate about the point at which right click is done.
2. Changing Dimensions	➔ Select part studio from bottom or right click on the part in assembly & select "Switch to_____" option. ➔ Edit the Sketch or Feature & Change dimensions suitably. ➔ The changes will reflect in the assembly & drawing (upon refresh).
3. Moving the Assembly within constraints	➔ Left Click on a link in 'assembly' & drag. ➔ Left Click on a link in 'assembly' & then use the gizmo to move in specific direction
4. Section or Transparency	➔ Click on the options below cube & select "Sectional View" & click on the part to create the sectional view. ➔ Right click on any part & select "Make Transparent".
5. Isolate Parts	➔ Right click on a part & select "Hide other instances" or hide parts one by one from the navigation.
6. Animate	➔ Right Click on the Mate Features & Select Animate. ➔ Change the limits of angles suitably & Click on Play.
7. 3D Print	➔ Export the parts by right clicking the part studio & select suitable formats.
8. Learn to Model	➔ Right click on any feature in the parts studio & select roll to here. ➔ Then move it down step by step to see how the part was modelled.
9. Learn to Assemble	➔ Create a fresh Assembly, insert parts & apply constraints one by one.
10. Check out the part drawings	➔ Click on the drawing studio & check the orthographic views of parts with dimensioning & production details wherever available.
11. Exploded View	➔ Click on the exploded view option on the right in assembly to create

METHODIST
COLLEGE OF ENGINEERING & TECHNOLOGY
Approved by AICTE, New Delhi & Affiliated to Osmania University
Accredited by NAAC with A+ Grade
Estd : 2008

INNOVATIVE TEACHING METHODOLOGY - MR. SRIKANTH RANGDAL

PLUMMER BLOCK ASSEMBLY IN ONSHAPE

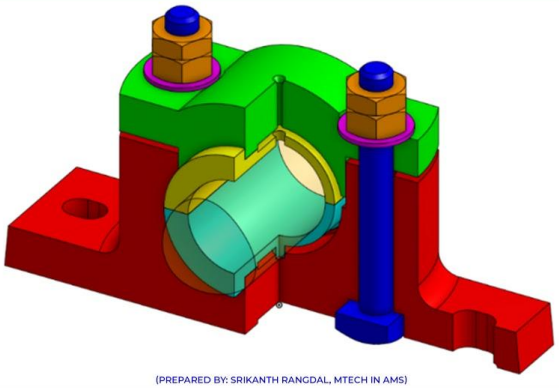

(PREPARED BY: SRIKANTH RANGDAL, MTECH IN AMS)

Operation	Procedure
1. 3D interactive rotating visualisation	⊕ Right Click & Drag to rotate objects. The objects rotate about the point at which right click is done.
2. Changing Dimensions	⊕ Select part studio from bottom or right click on the part in assembly & select "Switch to_____" option. ⊕ Edit the Sketch or Feature & Change dimensions suitably. ⊕ The changes will reflect in the assembly & drawing (upon refresh).
3. Moving the Assembly within constraints	⊕ Left Click on a link in 'assembly' & drag. ⊕ Left Click on a link in 'assembly' & then use the gizmo to move in specific direction
4. Section or Transparency	⊕ Click on the options below cube & select "Sectional View" & click on the part to create the sectional view. ⊕ Right click on any part & select "Make Transparent".
5. Isolate Parts	⊕ Right click on a part & select "Hide other instances" or hide parts one by one from the navigation.
6. Animate	⊕ Right Click on the Mate Features & Select Animate. ⊕ Change the limits of angles suitably & Click on Play.
7. 3D Print	⊕ Export the parts by right clicking the part studio & select suitable formats.
8. Learn to Model	⊕ Right click on any feature in the parts studio & select roll to here. ⊕ Then move it down step by step to see how the part was modelled.
9. Half Sectional View	⊕ Verification of the faces visible in half sectional view. ⊕ Edges to hide in the other half also can be verified.
10. Learn to Assemble	⊕ Create a fresh Assembly, insert parts & apply constraints one by one.
11. Check out the part drawings	⊕ Click on the drawing studio & check the orthographic views of parts with dimensioning & production details wherever available.
12. Exploded View	⊕ Click on the exploded view option on the right in assembly to create

METHODIST
COLLEGE OF ENGINEERING & TECHNOLOGY
Approved by AICTE, New Delhi & Affiliated to Osmania University
Accredited by NAAC with A+ Grade
Estd : 2008

INNOVATIVE TEACHING METHODOLOGY - MR. SRIKANTH RANGDAL

STUFFING BOX ASSEMBLY IN ONSHAPE

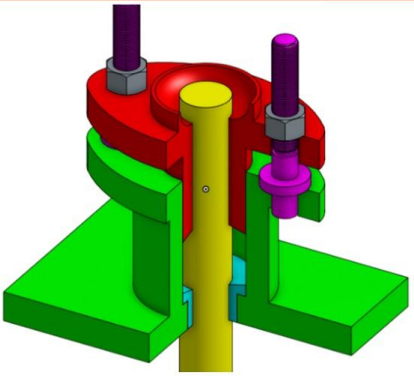

(PREPARED BY: SRIKANTH RANGDAL, MTECH IN AMS)

Operation	Procedure
1. 3D interactive rotating visualisation	⊕ Right Click & Drag to rotate objects. The objects rotate about the point at which right click is done.
2. Changing Dimensions	⊕ Select part studio from bottom or right click on the part in assembly & select "Switch to_____" option. ⊕ Edit the Sketch or Feature & Change dimensions suitably. ⊕ The changes will reflect in the assembly & drawing (upon refresh).
3. Moving the Assembly within constraints	⊕ Left Click on a link in 'assembly' & drag. ⊕ Left Click on a link in 'assembly' & then use the gizmo to move in specific direction
4. Section or Transparency	⊕ Click on the options below cube & select "Sectional View" & click on the part to create the sectional view. ⊕ Right click on any part & select "Make Transparent".
5. Isolate Parts	⊕ Right click on a part & select "Hide other instances" or hide parts one by one from the navigation.
6. Animate	⊕ Right Click on the Mate Features & Select Animate. ⊕ Change the limits of angles suitably & Click on Play.
7. 3D Print	⊕ Export the parts by right clicking the part studio & select suitable formats.
8. Learn to Model	⊕ Right click on any feature in the parts studio & select roll to here. ⊕ Then move it down step by step to see how the part was modelled.
9. Half Sectional View	⊕ Verification of the faces visible in half sectional view. ⊕ Edges to hide in the other half also can be verified.
10. Learn to Assemble	⊕ Create a fresh Assembly, insert parts & apply constraints one by one.
11. Check out the part drawings	⊕ Click on the drawing studio & check the orthographic views of parts with dimensioning & production details wherever available.
12. Exploded View	⊕ Click on the exploded view option on the right in assembly to create.

METHODIST
COLLEGE OF ENGINEERING & TECHNOLOGY
Approved by AICTE, New Delhi & Affiliated to Osmania University
Accredited by NAAC with A+ Grade
Estd : 2008

INNOVATIVE TEACHING METHODOLOGY - MR. SRIKANTH RANGDAL

MACHINE VICE ASSEMBLY IN ONSHAPE

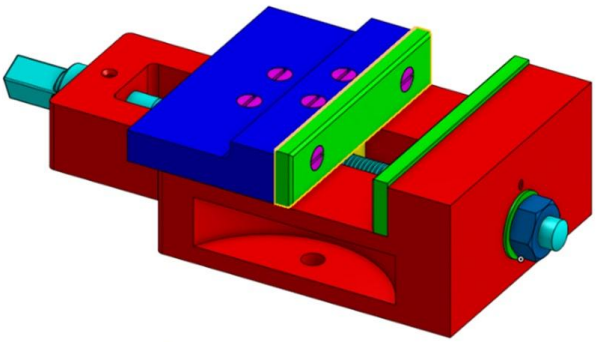

(PREPARED BY: SRIKANTH RANGDAL, MTECH IN AMS)

Operation	Procedure
1. 3D interactive rotating visualisation	⊕ Right Click & Drag to rotate objects. The objects rotate about the point at which right click is done.
2. Changing Dimensions	⊕ Select part studio from bottom or right click on the part in assembly & select "Switch to_____" option. ⊕ Edit the Sketch or Feature & Change dimensions suitably. ⊕ The changes will reflect in the assembly & drawing (upon refresh).
3. Moving the Assembly within constraints	⊕ Left Click on a link in 'assembly' & drag. ⊕ Left Click on a link in 'assembly' & then use the gizmo to move in specific direction
4. Section or Transparency	⊕ Click on the options below cube & select "Sectional View" & click on the part to create the sectional view. ⊕ Right click on any part & select "Make Transparent".
5. Isolate Parts	⊕ Right click on a part & select "Hide other instances" or hide parts one by one from the navigation.
6. Animate	⊕ Right Click on the Mate Features & Select Animate. ⊕ Change the limits of angles suitably & Click on Play.
7. 3D Print	⊕ Export the parts by right clicking the part studio & select suitable formats.
8. Learn to Model	⊕ Right click on any feature in the parts studio & select roll to here. ⊕ Then move it down step by step to see how the part was modelled.
9. Half Sectional View	⊕ Verification of the faces visible in half sectional view. ⊕ Edges to hide in the other half also can be verified.
10. Learn to Assemble	⊕ Create a fresh Assembly, insert parts & apply constraints one by one.
11. Check out the part drawings	⊕ Click on the drawing studio & check the orthographic views of parts with dimensioning & production details wherever available.
12. Exploded View	⊕ Click on the exploded view option on the right in assembly to create.